INSTRUCTION MANUAL

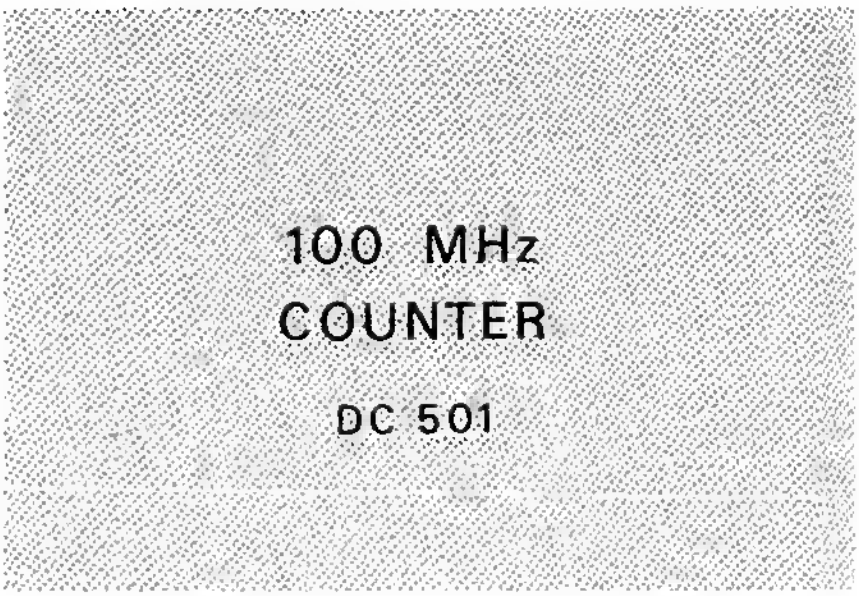

Serial Number _____

Tektronix, Inc. ◆ P.O. Box 500 ◆ Beaverton, Oregon 97005 ◆ Phone: 644-0161 ◆ Cables: Tektronix

070-1339-00

672

WARRANTY

All TEKTRONIX instruments are warranted against defective materials and workmanship for one year. Any questions with respect to the warranty should be taken up with your TEKTRONIX Field Engineer or representative.

All requests for repairs and replacement parts should be directed to the TEKTRONIX Field Office or representative in your area. This will assure you the fastest possible service. Please include the instrument Type Number or Part Number and Serial Number with all requests for parts or service.

Specifications and price change privileges reserved.

Copyright © 1972 by Tektronix, Inc., Beaverton, Oregon. Printed in the United States of America. All rights reserved. Contents of this publication may not be reproduced in any form without permission of Tektronix, Inc.

U.S.A. and foreign TEKTRONIX products covered by U.S. and foreign patents and/or patents pending.

TEKTRONIX is a registered trademark of Tektronix, Inc.

TABLE OF CONTENTS

		Page
SECTION 1	OPERATING INSTRUCTIONS	
	DC 501 General Description	1-1
	Preparation	1-1
	Basic Operation	1-1
	Signal Connection	1-2
	Input Attenuation and Trigger Level Adjustment	1-2
	Measurement Interval and Display Time Controls	1-2
	Optional Features	1-3
	Electrical Characteristics	1-3
SECTION 2	THEORY OF OPERATION	
	Block Diagram Description	2-1
	Circuit Description	2-1
SECTION 3	SERVICING INFORMATION	
	Symbols and Reference Designators	3-1
	Adjustment of Internal Controls	3-2
	Front-Panel Controls and Connectors	3-3
	Parts Locations	3-4
	Circuit Diagrams	
	Electrical Parts List	
	Mechanical Parts List	

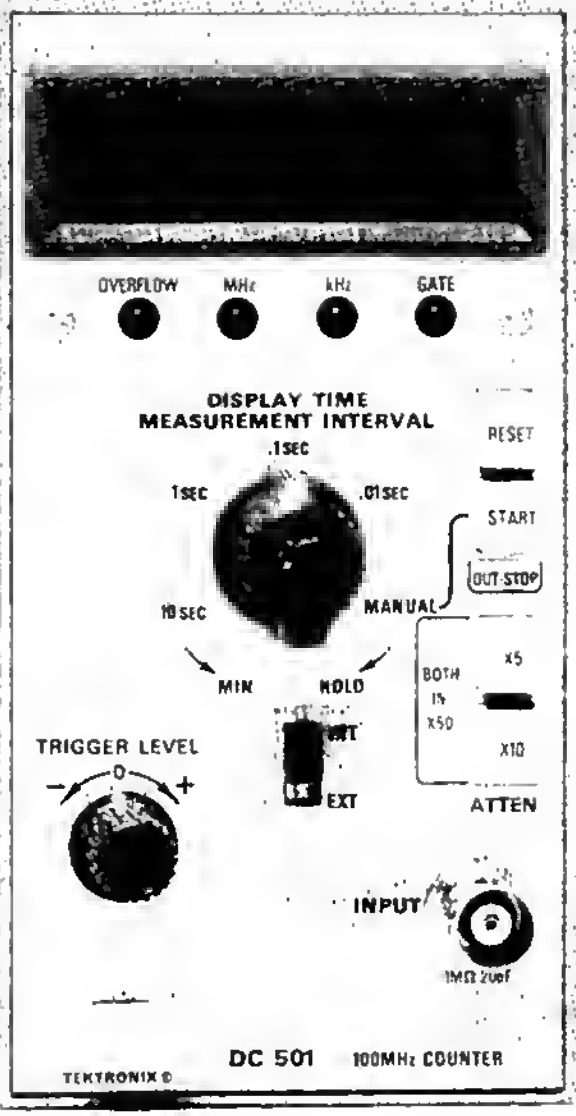

DC 501 100 MHz Counter

OPERATING INSTRUCTIONS

DC 501 General Description

The DC 501 100 MHz Counter measures frequency from 10 Hz to 100 MHz, and totalizes (counts number of events) from 0 to 10^7 at a maximum rate of 100 MHz. Seven 7-segment light-emitting diodes (LED's) provide a visual numerical display. The decimal point is automatically positioned and leading zeros (to the left of the most significant digit or decimal point) are blanked. Digit overflow is indicated by a front-panel LED. Signals to be counted can be applied via a front-panel BNC connector into an impedance of 1 MΩ and 20 pF or via the rear connector into an impedance of about 50 Ω and 20 pF. The DC 501 is designed to operate in a TM 500-Series Power Module only.

Preparation

The DC 501 is ready for use as it is received. To install, align the upper and lower rails of the DC 501 with the plug-in compartment tracks of the power module, and insert it fully. To remove, pull the release latch to disengage the DC 501 from the power module. Connect the power module cord to a suitable line-voltage source.

Basic Operation

NOTE

Refer to the Controls and Connectors pullout page. Also, additional information is given later in this section.

Display Check. Press the RESET button to check the 7 character segments of each digit; the numerical display should he a row of eights. To check the decimal point position and the units indicators, set the MEASUREMENT INTERVAL switch as follows:

Switch Position	Numerical Display	Units
.01 SEC	.0000	MHz
.1 SEC	.00000	MHz
1 SEC	.000	kHz
10 SEC	.0000	kHz
MANUAL	000	

In the MANUAL position, no decimal point will be displayed. Press the START button and check that the GATE indicator lights, then release the button (STOP) and check that the GATE light goes out. To check the OVERFLOW indicator, set the MEASUREMENT INTERVAL switch to 10 s, the INPUT switch to EXT, and apply a 15- or 20-MHz signal to the INPUT connector. The length of time a display can be held is determined by the DISPLAY TIME control, and will be discussed in the next few paragraphs.

Frequency Measurements. The DC 501 provides direct measurement of the average frequency of signals from about 10 Hz to 100 MHz. The input sensitivity is 300 mV peak to peak, so select the proper attenuation (X1, X5, X10, or X50) for the given signal. Other input characteristics are given on page 1-3.

CAUTION

The input signal must not exceed 500 volts.

Set the INPUT switch to EXT and apply a signal to the INPUT connector. Set the MEASUREMENT INTERVAL switch to the .01 SEC position and observe the numerical readout display. Adjust the TRIGGER LEVEL control for a stable reading. The zeroes leading the most significant digit in the display should be blanked. Then turn the MEASUREMENT INTERVAL switch to the position that gives the desired reading. Generally, use the shorter measurement intervals for high-frequency, low-resolution measurements and longer intervals for measurements requiring a high resolution. For instruments having the Automatic Gate option, the measurement interval is selected automatically when the MEASUREMENT INTERVAL switch is set to the AUTO position.

NOTE

The OVERFLOW indicator can be lit for high-resolution measurements, allowing the frequency to be indicated to 0.1 Hz. Refer to the Electrical Characteristics at the end of this section for resolution and accuracy at each position of the MEASUREMENT INTERVAL switch.

The display is updated at a rate determined by the DISPLAY TIME control. Each time a sample of the input signal is taken, the GATE light will flash and the new

reading will he displayed. To change the display time, which is continuously variable from about 0.1 second to 10 seconds, or to hold a display indefinitely, turn the DISPLAY TIME control.

Totalizing (Counting Number of Events). The DC 501 will display the accumulated number of pulses applied to the External or Internal input circuit up to 9,999,999 pulses. Input signal rate should not exceed 100 MHz. Before applying the signal, set the MEASUREMENT INTERVAL switch to MANUAL. Apply the signal and push the START button. The GATE indicator will light and the progressing count will be displayed. Adjust the ATTEN and TRIGGER LEVEL controls as necessary to obtain a steady count. To stop the counting, release the START button. The GATE light will go out and the displayed count will be held. The displayed count will continue by pressing the START button again. The counter can be reset to zero at any time by pushing the RESET button.

Signal Connection

Coaxial cables and probes offer very convenient means of connecting the signals to the front-panel INPUT BNC connector. These devices are shielded to prevent pickup of electrostatic interference. A 10X attenuation probe not only reduces the size of the input signal, but is also presents a high input impedance to allow the circuit under test to perform very close to normal operating conditions.

Input and output data access to the DC 501 is made via the plug-in connector contacts at the rear of the main circuit board. Fig. 1-1 identifies the contacts and their associated input/output assignments. An optional multi-pin connector, to which these data can be hard-wired to provide external access, is available to install on the rear panel of the power module.

Input Attenuation and Trigger Level Adjustment

Signals to be counted may have a wide variety of shapes and amplitudes, many of which are unsuitable to drive the counting circuits. Because of this, the signal is first passed through an attenuator, then applied to a signal-shaping circuit which converts it to rectangular pulses of uniform amplitude. This circuit includes a reference level adjustable between + and — 2 volts to which the incoming signal is compared, allowing the 300-millivolt sensitivity window of the signal-shaping circuit to be adjusted to a convenient amplitude on the incoming waveform (see Fig. 1-2). Obtaining a steady, reliable reading is dependent upon the proper selection of input attenuation and proper adjustment of the TRIGGER LEVEL control.

Generally, the best point on a waveform for triggering the counter is where the slope is steep and therefore usually free of noise. On a sine-wave signal, for example, the steepest slope occurs at the zero-crossing point. Noise pulses or other signal components of sufficient amplitude to produce unwanted trigger pulses will cause an erratic or incorrect count. Fig. 1-2 shows the TRIGGER LEVEL control adjusted to avoid error. In critical measurement applications, monitor the incoming signal with a test oscilloscope.

Measurement Interval and Display Time Controls

The MEASUREMENT INTERVAL switch selects the time interval (also called gate time) during which the DC 501 counts. The internal time-base circuit derives gate times from an accurate 1-MHz reference signal to make frequency measurements. These gate times are 0.01 s, 0.1 s, 1 s, or 10 s. The measurement interval selected determines the measurement range and resolution. Also, the displayed decimal point is positioned correctly and the correct measurement units (MHz or kHz) are indicated for the corresponding switch position.

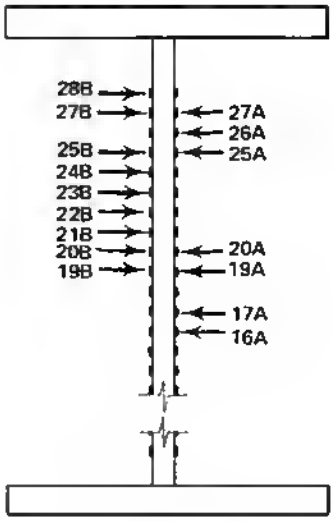

Contact	Assignment
28B	Second decimal point (D2) output.
27A	Internal scan clock disable input.
27B	MHz light output.
26A	Reset input/output.
25A	TS_{ϕ} (Time Slot Zero) output.
25B	External scan clock input.
24B	Internal scan clock (2 kHz) output.
23B	Overflow output.
22B	MSD (most significant digit)
20B	8
20A	4
21B	2
19A	1
	BCD output, serial by digit.
19B	Data good output.
17A	Signal input ground.
16A	Signal input.

Fig. 1-1. Input/Output assignments of plug-in connector contacts.

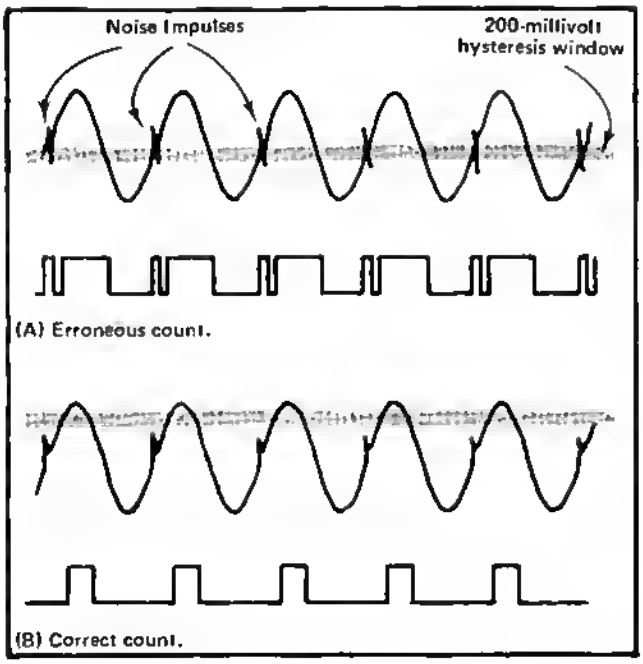

Fig. 1-2. Two examples of triggering circuit output showing how proper adjustment of TRIGGERING LEVEL control can avoid an erroneous count.

The DISPLAY TIME control sets the length of time a measurement can be held in the counter and displayed. The HOLD detent position allows a measurement to be held indefinitely, or until the counter is reset to zero by the front-panel RESET button.

Optional Features

Option 1—0.5 P/M 5 MHz Crystal Oscillator. The DC 501 can be ordered with a temperature-compensated crystal oscillator to provide a highly stable and precise internal time base 1-MHz clock. This option includes a divide-by-five IC counter to provide the proper output.

Option 2—Automatic Gate Control and Readout Scaling Circuit. This circuit automatically selects the 0.1-, 1-, or 10-second measurement interval to display the largest number of digits without overflow, and provides the appropriate scaling of decimal-point and units lights to produce the correct display. If overflow indication occurs, the input signal is ⩾ 100 MHz and the overflow digit is a "1".

Electrical Characteristics

MEASUREMENT RANGES AND ACCURACY

Frequency: 10 Hz to 100 MHz; 0.1-s to 10-s counting gate time; displays kHz or MHz units with positioned decimal point. Accuracy, ±1 count ± time-base accuracy.

Count: Register capacity, 10^7; totalizes events accumulated between start/stop commands from front-panel button.

INPUT

Frequency, 10 Hz to 100 MHz; sensitivity, 300 mV peak to peak; triggering level, adjustable ±2 V; attenuator, X1, X5, X10, or X50; maximum input voltage, 500 V (DC + peak AC, or peak to peak AC) at 1 kHz or less; impedance, (EXT input), approx 1 MΩ paralleled by about 20 pF (INT input) approx 50 Ω paralleled by about 20 pF; coupling, AC.

INTERNAL TIME BASE

	Standard	Option 1
Crystal Frequency	1 MHz	5 MHz
Stability (0°C to +50°C), after 1/2 hour warm-up	Within 1 part in 10^5	Within 5 parts in 10^7.
Long-term Drift	1 part or less in 10^5 per month	1 part or less in 10^7 per month
Accuracy	Adjustable to within 1 part in 10^7	Adjustable to within 5 parts in 10^9.

INTERNAL MEASUREMENT INTERVAL.

Selectable in decade steps.

Measurement Interval	Display	Units	Resolution
10 ms	000.0000	MHz	100 Hz
100 ms	00.00000	MHz	10 Hz
1 s	0000.000	kHz	1 Hz
10 s	000.0000	kHz	0.1 Hz
Manual	0000000	(adds to displayed number)	

Accuracy, within $\pm \frac{1}{\text{total count}} \pm$ time-base accuracy.

DATA PRESENTATIDN

Visual numerical readout, seven 7-segment LED with automatically positioned decimal point; units, LED indicates kHz or MHz; overflow, LED indicates that readout is exceeded; gate, LED indicates open gate.

DATA INPUTS and OUTPUTS

Available via plug-in connector to 50-pin connector at rear of Power Module. Input lines are available for signal input, and internal and external scan clock control. Output lines are available for BCD output (serial-by-digit), and to indicate status of timing, data good, reset, scale, decimal point and overflow.

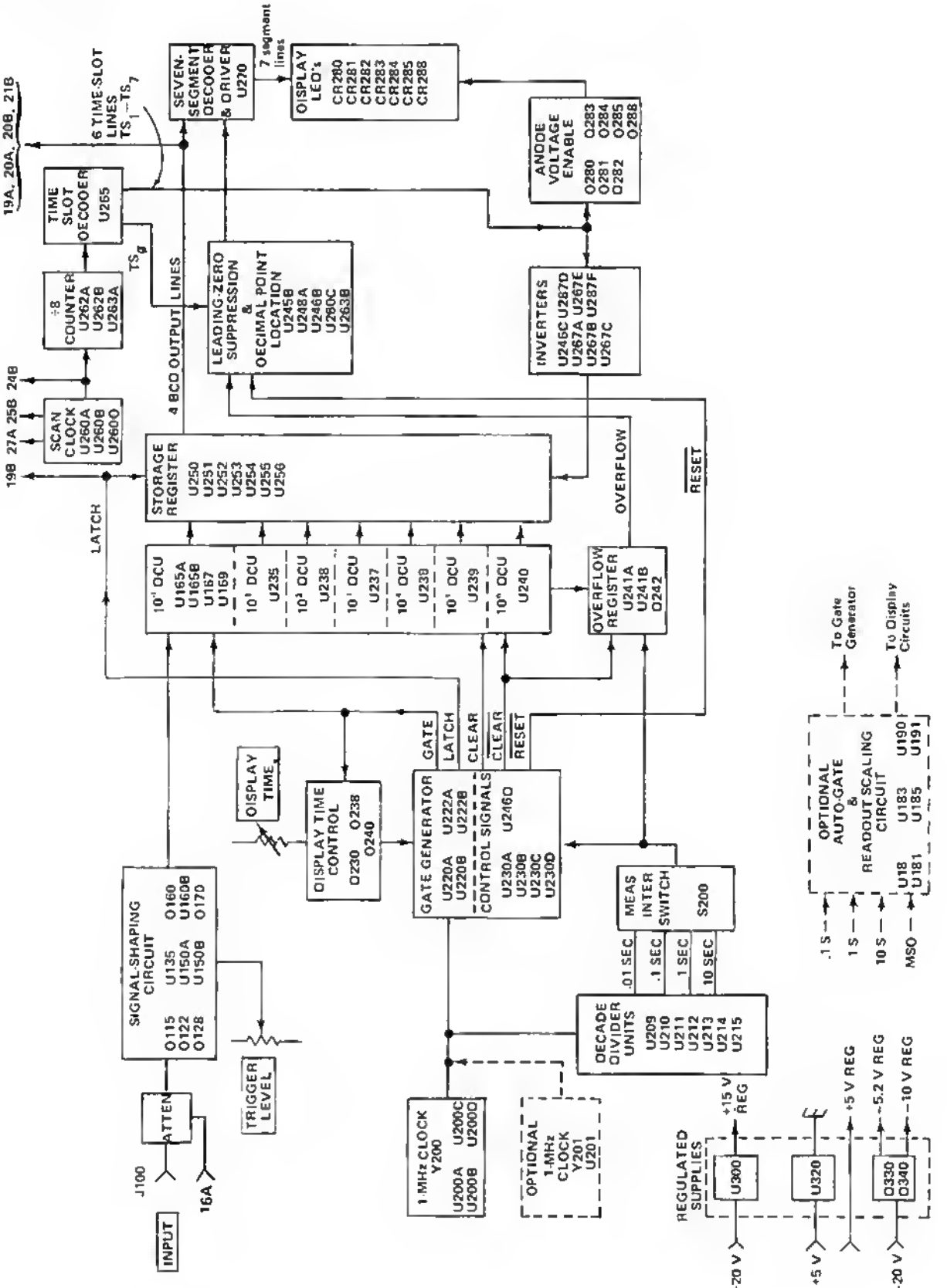

Fig. 2-1. DC 501 Block Diagram.

THEORY OF OPERATION

Introduction

This section of the manual contains an electrical description of the circuits in the DC 501 100 MHz Counter. A block diagram is shown in Fig. 2-1, and complete schematics are given on pullout pages in the Servicing Information section.

BLOCK DIAGRAM OESCRIPTION

Signals to be counted are applied via the EXT INPUT connector or via pin 16A at the rear interface, attenuators, and a coupling capacitor to the signal-shaping circuit. This circuit conditions the input signal and produces an output suitable to drive the first decade counter.

The time-base circuit generates the signals which determine when the counter is allowed to count (GATE), when the readout display is updated (LATCH), and when the counter is cleared or reset (CLEAR, $\overline{\text{CLEAR}}$, or $\overline{\text{RESET}}$). The generation and the time relationship between these signals are determined by the front-panel MEASUREMENT INTERVAL, DISPLAY TIME, Manual Gate START/STOP, and RESET controls.

The decade counter units receive the shaped input signal when the gate is "open". Each DCU corresponds to one of the display LED's. Immediately upon closure of the GATE, the LATCH locks the sample taken into the storage register. If the sample taken exceeds the seven available display digits, the excessive count spills over and is indicated by the OVERFLOW LED on the front panel. Before a new sample of the input signal is taken, the time-base circuit sends in a CLEAR pulse to reset all the DCU's to zero.

The multiplexing circuit scans the latches of the storage register at a 2-kilohertz rate, enabling each latch and its corresponding display LED sequentially on a time-shared basis. The BCD output of the storage register is decoded and the correct combination of LED segments is lighted to display any digit between 0 and 9. Also, the decoder and display-multiplexing circuit provides leading-zero suppression if the display is within the display-register capacity. Decimal point location is a function of the MEASUREMENT INTERVAL switch.

CIRCUIT DESCRIPTION

Input Circuit

Signals to be counted are applied via front-panel INPUT connector J100, or via the internal input at pin 16A at the rear interface, to the attenuators. The attenuators are frequency-compensated voltage dividers consisting of resistors R102-R107 and capacitors C102-C107. Switches S100A and S100B allow front-panel selection of X1, X5, X10, or X50 attenuation of the input signal. C110 provides AC coupling.

FET source follower O115 and emitter follower O122 present a high impedance to the input signal. The diodes in the base circuit of E. F. Q12B form a series-limiter and clamping network, which reduces the input signal to limits suitable for driving the shaping circuits. The clamping diodes limit the voltage at the emitter of O12B to a dynamic range of about 1.2 volts.

U150B, an OR gate integrated circuit with push-pull outputs, is connected as a Schmitt trigger. It shapes the input signal into a square wave. Its "hysteresis window" is a width of about 200 mV. The output changes states when the signal voltage passes through the upper threshold, then reverts to its original state when the signal voltage passes through the lower threshold. For this reason, an input signal smaller in amplitude than the width of the hysteresis window cannot activate the counting circuits.

The quiescent level at the input of U150B can be adjusted to overcome some of the triggering difficulties arising from various input-signal shapes and frequencies. Integrated-circuit operational amplifier U135 and its associated discrete components are connected as a voltage follower. TRIGGER LEVEL potentiometer R135 selects a voltage between ground and about −2 volts and applies it to pin 3 of U135. This level is then established at pin 2, and hence, the input of U150B, through the action of the operational amplifier.

The output of U150B is applied to U150A, whose push-pull outputs drive O160 and Q162, which are connected as a differential pair. This circuit provides a level shift to TTL level, and further shapes the signal to be counted. A waveform with fast rising and falling edges is produced at the collector of O160. CR165 limits the amplitude of the count signal to 5 volts, clamping the

negative-going portion of the signal to ground. The signal is then passed through emitter follower Q170 to U1608, where it receives a final phase inversion (to correspond with the input signal) and becomes the decade input.

Time Base and Control Circuit

General. The time base and control circuit generates the following control signals:

1. GATE. The GATE output determines when the counter is allowed to count. When this output level is HI, the gate is "open" and the counter counts the input signal. While the gate is open, the front-panel GATE indicator is lit. The time during which the gate is open is determined by the MEASUREMENT INTERVAL switch setting.

2. LATCH. This output determines when the measurement made by the decade counter units is transferred to the storage register latches, permitting the readout display to be updated. In the normal gate mode (one of four selectable gate intervals), or in the optional AUTO gate mode, the LATCH goes HI for 1 μsec immediately upon closure of the GATE. In the manual gate mode, the LATCH is held HI to allow continuous updating. Also, the LATCH is activated by the $\overline{\text{RESET}}$ signal.

3. CLEAR and $\overline{\text{CLEAR}}$. These outputs determine when the counter is to be reset to zero. Just before the GATE opens, CLEAR and $\overline{\text{CLEAR}}$ are activated for a short duration (less than 2 μsec), resetting the DCU's to zero before a new count is taken. Also, CLEAR and $\overline{\text{CLEAR}}$ are activated by the $\overline{\text{RESET}}$ signal.

4. $\overline{\text{RESET}}$. This output is used to reset all of the counting and dividing circuits in the DC 501, and to enable all of the LED-readout character segments for a segment check. The active level is LO, produced by a switch closure to ground (front-panel RESET switch, or between the detent positions of the MEASUREMENT INTERVAL switch).

1 MHz Clock. A precise one-megahertz clock provides the reference for operation of the gate-generating circuits. The output of crystal oscillator Y200 is adjustable by C201 to exactly one megahertz. The four parts of U200 form a shaper-buffer stage to produce square-wave clock pulses and to isolate the oscillator from the 1-MHz output line.

NOTE

An optional 1 MHz clock is available, using a very stable 5 MHz crystal oscillator and a divide-by-five counter. This combination is shown on the schematic as Y201 and U201.

Time Base Decade Dividers (DDU's). The DDU's consist of seven cascaded divide-by-ten counters, U209 through U215. They produce four gate times, 0.01 sec, 0.1 sec, 1 sec and 10 sec, which are made available via the MEASUREMENT INTERVAL switch to the gate generator to establish the precise time interval the GATE is open. The 1 MHz clock signal is applied to pin 14 of U209, whose output is connected to the input of the subsequent decade. Each decade is clocked with a negative-going transition. The QDU's are reset by a CLEAR pulse, which places a 0 count in U209 and a 9 count in each subsequent decade.

Gate Generator. The gate generator produces the GATE control signal and initiates the CLEAR, $\overline{\text{CLEAR}}$, and LATCH pulses. The generating portion consists of U220A, U222A, U220B, and U222B. The display time control portion consists of D230, D238, and Q240. The circuit will be described first in the normal gate mode (MEASUREMENT INTERVAL switch in one of the four gate time positions).

Assume that the T_0 conditions are as given in Fig. 2-2. The Q outputs of U220A, U222A, U220B, and U222B are all LO. Q230 is off and the emitter of Q238 rises as C235 charges. At T_1, D238 reaches its firing potential and discharges the capacitor. This results in a short-duration LO pulse on the direct-set input (pin 2) of U220A, forcing its D output HI and its $\overline{\text{D}}$ output LO. With two HI inputs on NAND gate U230A, its output goes LO and the output of NOR gate U230C goes HI, producing the CLEAR and $\overline{\text{CLEAR}}$ control signals. The next HI-to-LO transition from the 1-MHz clock (T_2) toggles U222A, causing its D output to go HI and its $\overline{\text{D}}$ to go LO. With a LO applied to one of its inputs, U230A reverts to its original condition, terminating the CLEAR and $\overline{\text{CLEAR}}$ pulses. The DDU's then start counting from their 0999999 reset condition.

At the end of a 10-microsecond delay (time for the QDU's to count the first digit, plus a propagation delay), a negative transition from the QDU's via the MEASUREMENT INTERVAL switch toggles U220B. This corresponds to T_3 in Fig. 2-2. U220B's Q output goes HI and its $\overline{\text{D}}$ output goes LO. The next negative transition from the 1-MHz clock (T_4) toggles U222B, causing its D output to go HI (GATE open) and its $\overline{\text{Q}}$ output to go LO (supplying current to the front-panel GATE indicator LED, CR225). The GATE signal is also applied to the base of D230, saturating the transistor and preventing C235 from charging.

The GATE remains open (HI) for the time duration selected by the MEASUREMENT INTERVAL switch. At the end of this time, which corresponds to T_5 in Fig. 2-2, another negative transition from the QDU's toggles U220B. U220B's Q output goes LO and its $\overline{\text{Q}}$ output goes HI. The next negative transition from the 1-MHz clock (T_6) toggles

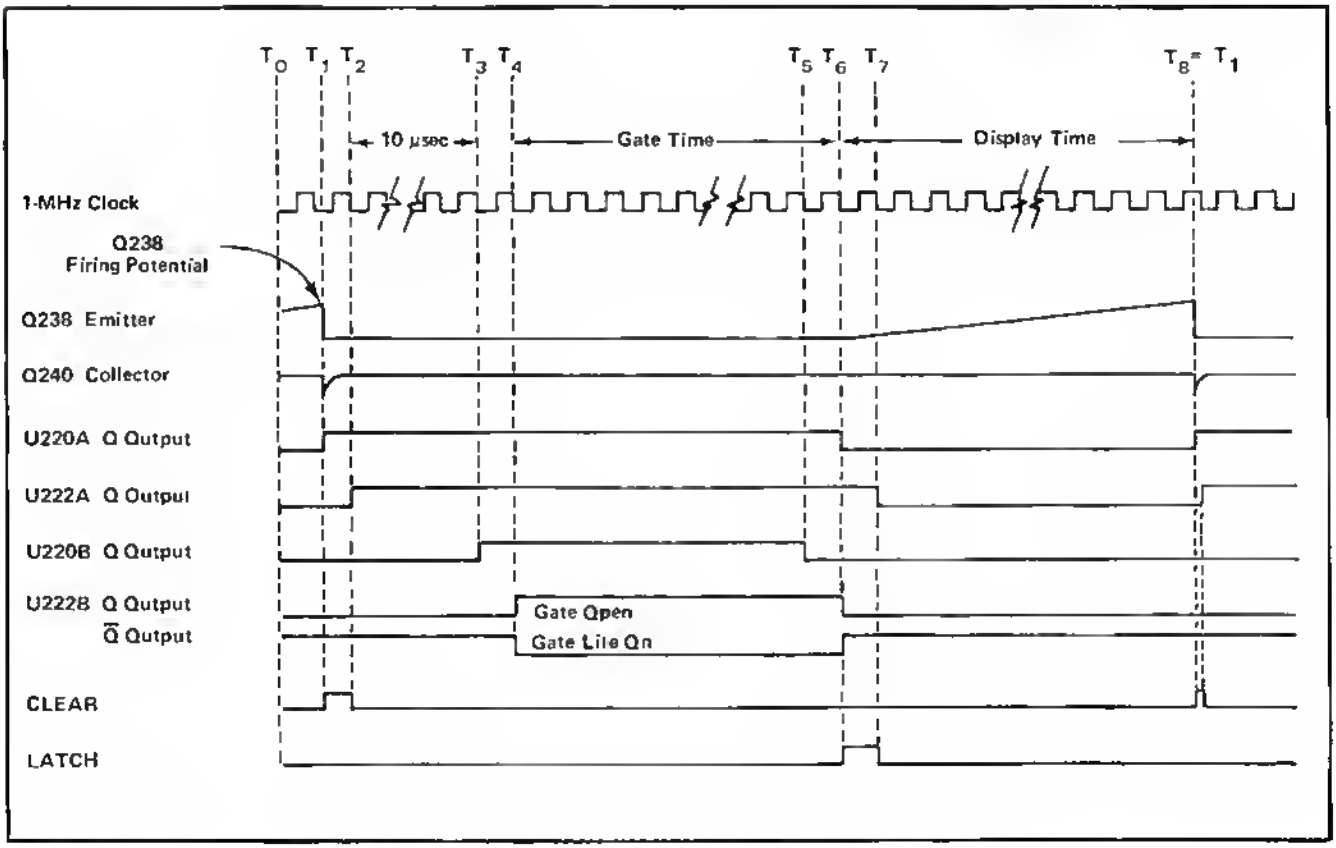

Fig. 2-2. Time Base generator normal gating mode ladder diagram.

U222B, causing its Q output to go LO, closing the GATE. Simultaneously, the $\overline{Q}$ output goes HI, removing current from the GATE indicator LED.

When the GATE output goes LO, the negative transition toggles U220A, switching Q LO and $\overline{Q}$ HI. Now NAND gate U230D has two HI inputs, placing a LO at the input of OR gate U230B and activating the LATCH control signal (HI state). One microsecond later (T_7), a negative edge from the 1-MHz clock toggles U222A, switching its outputs and placing a LO on the input of NAND gate U230D. U230D reverts to its original condition, terminating the LATCH signal.

The display time begins when the GATE signal ends (T_6). When Q230 turns off, C235 begins to charge through R232-R235 toward the Vcc supply. R235, DISPLAY TIME, provides an adjustable time constant to vary the display time from about 0.1 second to about 10 seconds. When the DISPLAY TIME control is fully clockwise (HOLD detent position), S235 opens, and C235 stops charging. When S235 is closed and C235 charges sufficiently to bring Q238 to its firing potential (T_1), the display time ends and the next GATE-opening sequence begins.

Manual Gate. The manual mode of operation is selected by placing the MEASUREMENT INTERVAL switch in the MANUAL position. The switch closure to ground (cam 5 of the switch) places a LO on the set inputs of U220B and U222A, and a LO on the clear input of U220A. This forces the Q outputs of U222A and U220B HI, and the Q output of U220A LO. With both inputs of U230D held HI, the LATCH output is held HI, allowing the counter to update the display continuously. The GATE is opened when the front-panel START button is pushed in, opening S210 and applying a HI to the clear input of U222B. As before, the GATE-open condition is HI at the Q output of U222B. The GATE is then closed when S210 is set to STOP (button out). To reset the counters in the manual mode, the RESET button must be pushed to activate the CLEAR, $\overline{\text{CLEAR}}$, and $\overline{\text{RESET}}$ control signals.

Automatic Gate (For Instruments Having Option 2). The automatic gate mode is selected by placing the MEASUREMENT INTERVAL switch in the AUTO position. The output of the automatic time base circuit is connected to the gate generator via contact 1 of the switch. Contact 2 opens to enable the readout-scaling circuit. The automatic gating cycle begins with the CLEAR pulse, which occurs when Q238 reaches its firing potential, as discussed for the

normal gate mode (gate generator). The CLEAR pulse resets the time-base DDU's and the counter circuit DCU's, resulting in a LD applied to the toggle inputs of U180A, U1808, U181A, and U1818. This establishes the following initial conditions: LO at both inputs of U183A, LO at both inputs of U183D, HI at both inputs of U185C, a LO and a HI at the inputs of U185B, and HI at both inputs of U185A. The resulting LD at the output of U185A is applied to the toggle input of U2208 in the gate generator. The next HI-to-LD transition from the 1-MHz clock will toggle U2228 and open the GATE. Just before the GATE opens, however, U1838 has two HI inputs, producing a LO to clear U180A, U1808, U181A, and U1818. The U1838 output then returns to the HI state less than a microsecond later when the GATE opens.

The GATE closes at the end of a 0.1-second or a 1-second interval if the display register is approaching its capacity, or at the end of a 10-second interval. The toggle input to U181A is also the toggle input to the 10^6 DCU, which corresponds to the most significant digit of the display. The gate-closure sequence is as follows:

After about 80 milliseconds, a HI is applied from the .1-sec DDU to U183A, which results in a HI applied via U185C to NAND gate U185B for about 20 milliseconds. If during that period U181A is toggled by the MSD (most significant digit), its D output goes HI, causing U185A output to go HI. At the end of precisely .1 second, a HI-to-LD transition is input from the .1-sec DDU, which results in the U185A output going LO, toggling U2208 in the gate generator. Then on the next HI-to-LO transition from the 1-MHz clock, U2228 is toggled, ending the GATE interval.

If no MSD input is received during the .1-second interval, the process is repeated through the 1-second interval, with U180B and U183D the active devices. The .1-second logic cannot interfere with this process because of the LD input at pin 1 of U183A, which was established when U180A was toggled at the end of .1 second. If no MSD input is received during the 1-second interval, then the negative transition received by U183C at the end of precisely 10 seconds causes the U185A output to go LD, initiating GATE closure.

When the GATE closes, the LATCH pulse toggles storage registers U190A and U1908, transferring the 1-second and 10-second timing logic to the inputs of NAND-gate decoders U191A, U1918, and U191C. These devices provide the proper readout scaling. If the GATE time was 0.1 second, CR192 and CR193 are turned on; 1 second, CR191 and CR195; 10 seconds, CR190 and CR194.

Counter Circuit

Decade Counter Units (DCU's). The 10^0 through 10^6 DCU's are seven cascaded divide-by-ten counters. The first decade counter is made up of four individual J-K flip-flops to accept the high-speed decade input (up to 100 MHz), and each subsequent DCU is a single IC. U165A, U1658, U167, and U169 comprise the first (10^0) decade counter, and U235 through U240 make up the remaining six DCU's.

When the J and K inputs of U1658 are HI (GATE open), the counter is enabled. The input signal is applied to the toggle input of U165B. On every tenth clock input counted by the first decade counter, the output of U169 goes LO, providing a carry signal which becomes the clock input for the second decade counter. Each subsequent decade divides by ten in a similar manner. Four 8CD output lines are connected from each DCU to its associated storage-register latch. When the CLEAR (HI) and $\overline{\text{CLEAR}}$ (LD) signals are activated, all of the decade counters are reset to the zero-count state.

Storage Register. The seven IC latches (U250 through U256) comprise a storage register which stores the corresponding decade counter 8CD output. The 8CD output is applied to the data inputs at pins 1, 5, 7, and 3 (2^0, 2^1, 2^2, and 2^3 bits respectively). The LATCH pulse is applied to the data-strobe input at pin 2 of each latch immediately upon closure of the GATE or when the MEASUREMENT INTERVAL switch is placed in the MANUAL position, as described in the time base and control circuit. While the LATCH input is HI, the logic levels at the data inputs are transferred to the associated BCD bit output to be scanned by the multiplexing circuit.

Overflow Register. When the decade counters have counted to 9,999,999, the counters are full. At the next count, the 2^3 output of U240 goes LD, providing a toggle input to U2418. When this occurs, a LD is transferred from pin 10 to pin 8 of U2418, then when the LATCH pulse ends (goes LO), U241A is toggled and the LO is transferred to pin 13. When pin 13 of U241A goes LD, CR241 and CR242 conduct. CR242 is an LED, and in its conduction state gives a front-panel DVERFLDW indication.

In the Manual counting mode, DVERFLOW indication is achieved via D242 and CR244. The emitter of O242 is grounded by a switch closure, then when pin 9 of U2418 goes HI on the first overflow count, O242, CR244, and CR242 turn on.

U241 is reset by the $\overline{\text{CLEAR}}$ pulse. To prevent leading-zero suppression during the overflow condition, the display-controlling circuits are notified via U245A that the count is in excess of that displayed by the LED readout.

Decode and Display Multiplex

Scan Clock. The scan rate of the multiplexing circuit is determined by the scan clock. The scan clock is composed of U260B and U260D, which operate as a free-running multivibrator at an approximate 2-kilohertz rate. The scan-clock output is passed through NOR gate U260A, which can also accept an externally applied scan clock signal. Other input/output lines provide internal scan-clock disable and internal scan clock output. The scan clock drives an eight-state counter and a storage register for zero suppression.

÷ B Counter and Time-Slot Decoder. The divide-by eight counter is made up of U262B, U263A, and U262A, which are three halves of SN7474 type D flip-flops. The output of this counter drives U265, and SN74145 BCD-to-decimal decoder. U265 provides eight output lines (designated TS_{ϕ} through TS_7 in the schematics and in Fig. 2-3) to simultaneously enable the output of each counter latch and its corresponding display LED sequentially. For example, when the TS_1 line goes LO, Q2B0 is turned on to supply anode voltage to CR280 at the same time inverter U267C applies a HI to pin 6 of latch U256, enabling its output. Operation in a time sequence allows the latches to share a common set of output lines.

Seven-Segment Decoder and Display LED's. U270 is a BCD-to-seven-segment decoder. It accepts the BCD output of the latches, then supplies current to the appropriate cathodes of the enabled LED to display the correct number. The display LED's are CR280 through CR286. When looking at the front panel of the DC 501, CR2B0 controls the numerical digit displayed at the far left (10^6), CR281 controls the second (10^5), etc. Each LED has seven segments, arranged so that a combination of lighted segments forms a number. When all of the segments are lighted, an "8" is formed.

Leading Zero Suppression. Decoder driver U270 also has a zero-blanking feature which allows suppression of the zeroes leading the most significant digit (MSD) in the display. At TS_{ϕ}, a LD is applied to the direct-clear input of U263B, the zero-suppression storage register. This sets U263B to the zero-suppress state (HI at pin 8), allowing the Ripple-Blanking Input (RBI, pin 5) of U270 to be LO. When the output of U265 advances to the next time slot (TS_1), the RBI of U270 remains LO for a few nanoseconds due to propagation delays, which allows the first digit to arrive from the latches while RBI is LD. If this first digit being decoded is a zero, the output to the display LED will be inhibited and the Ripple Blanking Output (pin 4) will be LD. If the digit is not a zero, the outputs are enabled and

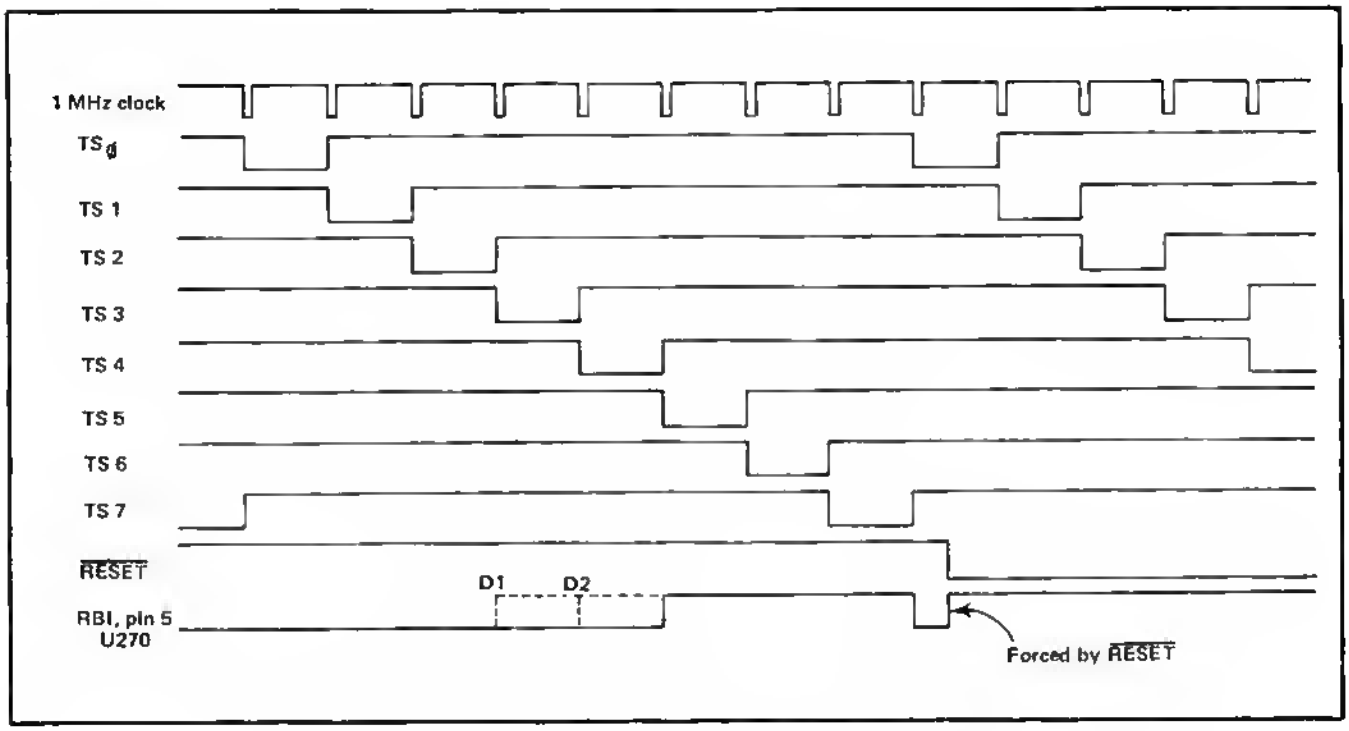

Fig. 2-3. Multplexing circuit ladder diagram showing timing with an all-zero display.

RBO goes HI. The RBO is applied to the D input (pin 12) of U263B and is transferred to the output when the next scan-clock HI-to-LO transition occurs. Thus if the first digit is a zero, pin 5 of U270 is held LO, inhibiting the output until the first non-zero digit comes through the decoder. When the first non-zero digit arrives, the outputs of U270 are enabled and the digit is displayed. Also, the RBO output at pin 4 is set HI, removing the RBI from pin 5 and allowing all succeeding digits to be displayed through the TS_7 sequence.

When the scan gets past the decimal point in the display, or if the display overflows, any zeroes arriving at the decoder should be displayed. This is achieved as follows: TS_5 is inverted by U267E and applied through OR gate U245B as a LO at the direct-set input of U263B. This holds pin 5 of U270 HI, preventing zero-blanking during the TS_5, TS_6, and TS_7 time slots. The location of the decimal point in the display is determined by the MEASUREMENT INTERVAL switch. The proper information is applied via the closed contacts of the switch to either NAND gate U246A or U246B. Then either TS_3 or TS_4 is enabled to the input of OR gate U245B via these NAND gates, setting U263B to the non-blank state at the appropriate time. In the case where the counter overflows, the HI output from U245A is applied to U245B, setting U263B to the non-blank state.

When the front-panel RESET button is pushed, $\overline{\text{RESET}}$ goes LO, overriding the output of U263B, applying the non-blank and lamp-test functions to the decoder. This causes all seven segments in the display LED to be turned on.

Input and Output Data. The following inputs and outputs are available via the plug-in connector to external equipment. See Fig. 1-1.

INT SCAN DISABLE: A LO applied to this line disables the internal scan clock.

EXT SCAN: Provides input for an external scan clock.

INT SCAN CLOCK OUT: Provides output for the internal scan clock.

TS_ϕ: A LO is present on this output line in the TS_ϕ state

DATA GOOD: A HI is present on this output line when a new reading is being transferred into the storage-register latches.

OVERFLOW: This output is HI when the count overflows.

$\overline{\text{RESET}}$: This is a dual-function input/output line. It provides a LO output during reset, or can be used as an external reset input.

Data Lines: 1, 2, 4, 8 provide BCD output, serial by digit, from the currently enabled storage-register latch. Other data lines include a LO when the MHz light is on, and a LO when the second decimal point is lit.

Regulated Power Supplies

The DC 501 operating power is obtained from the power module mainframe and then electronically regulated to provide stable supplies of +15 volts, +5 volts, −5.2 volts, and −10 volts. The +15-volt supply, whose active device is U300, provides the reference for the remaining supplies. Its output is set to exactly +15 V by adjustment of R305.

Integrated circuit U320 regulates the +5-volt supply, and transistors Q330 and Q340 regulate the −5.2-volt and −10-volt supplies respectively. The series-pass transistors for these supplies are located in the mainframe, where they can provide the proper heat dissipation.

SERVICING INFORMATION

Symbols and Reference Designators

Electrical components shown on the diagrams are in the following units unless noted otherwise:

Capacitors = Values one or greater are in picofarads (pF).
Values less than one are in microfarads (μF).
Resistors = Ohms (Ω)

Symbols used on the diagrams are based on ANSI-Y32.2-1970.

Logic symbology is based on MIL-STD-806B in terms of positive logic. Logic symbols depict the logic function performed and may differ from the manufacturer's data.

The following special symbols are used on the diagrams:

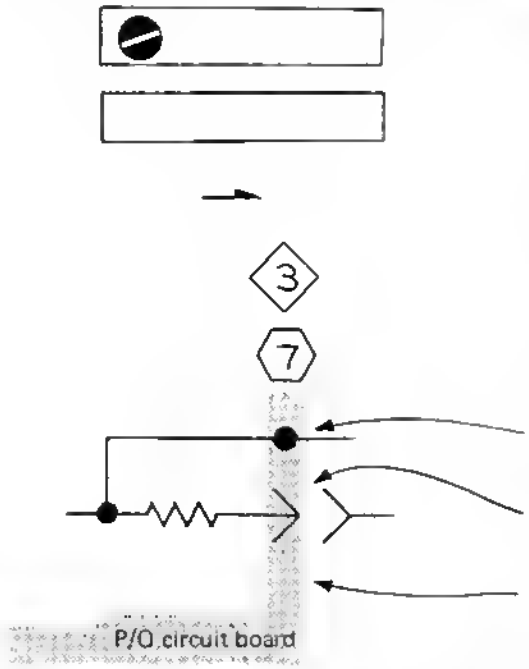

External Screwdriver adjustment.

External control or connector.

Clockwise control rotation in direction of arrow.

Refer to diagram number indicated in diamond.

Refer to waveform number indicated in hexagon.

Connection soldered to circuit board.

Connection made to circuit board with interconnecting pin.

Blue tint encloses components located on circuit board.

The following prefix letters are used as reference designators to identify components or assemblies on the diagrams.

A	Assembly, separable or repairable (circuit board, etc.)
AT	Attenuator, fixed or variable
B	Motor
BT	Battery
C	Capacitor, fixed or variable
CR	Diode, signal or rectifier
DL	Delay line
DS	Indicating device (lamp)
F	Fuse
FL	Filter
H	Heat dissipating device (heat sink, heat radiator, etc.)
HR	Heater
J	Connector, stationary portion
K	Relay
L	Inductor, fixed or variable
LR	Inductor/resistor combination
M	Meter
Q	Transistor or silicon-controlled rectifier
P	Connector, movable portion
R	Resistor, fixed or variable
RT	Thermistor
S	Switch
T	Transformer
TP	Test point
U	Assembly, inseparable or non-repairable (integrated circuit, etc.)
V	Electron tube
VR	Voltage regulator (zener diode, etc.)
Y	Crystal

Services Available

Tektronix, Inc. provides complete instrument repair and adjustment at local Field Service Centers and at the Factory Service Center. Contact your local TEKTRONIX Field Office or representative for further information.

Test Equipment

For measurement of the power supply voltages, a 20,000 ohms/volt VOM will give satisfactory measurements. For example, Triplett 630 NA multimeter.

For 1-MHz frequency measurement, a secondary frequency standard or other frequency source having a stability of at least 5 parts on 10^7 (5 parts in 10^8 if measuring optional 5 MHz crystal output) is recommended for accuracy. Also recommended is a test oscilloscope with a bandwidth of at least 1 MHz and a stable triggering circuit for frequency-comparison measurement.

Procedure

NOTE

The performance of this instrument can be check at any temperature within the 0°C to +50°C range. Make any adjustment at a temperature between +20°C and +30°C (+68°F and +86°F).

The DC 501 can be operated either fully installed in a TM 500 Series Power Module or connected to a plug-in extender (TEKTRONIX Part No. 067-0645-01).

Power Supply Checks and Adjustment. Connect the voltmeter between the +15-volt test point and ground. Adjust R305 for a reading of +15 volts. Then check the +5-volt, −5.2-volt, and −10-volt supplies to be within 5%.

NOTE

If the instrument is operated on the plug-in extender, the +5-volt supply may not regulate.

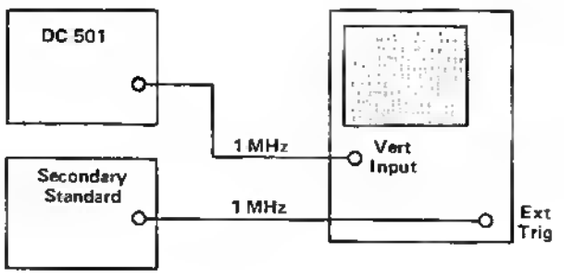

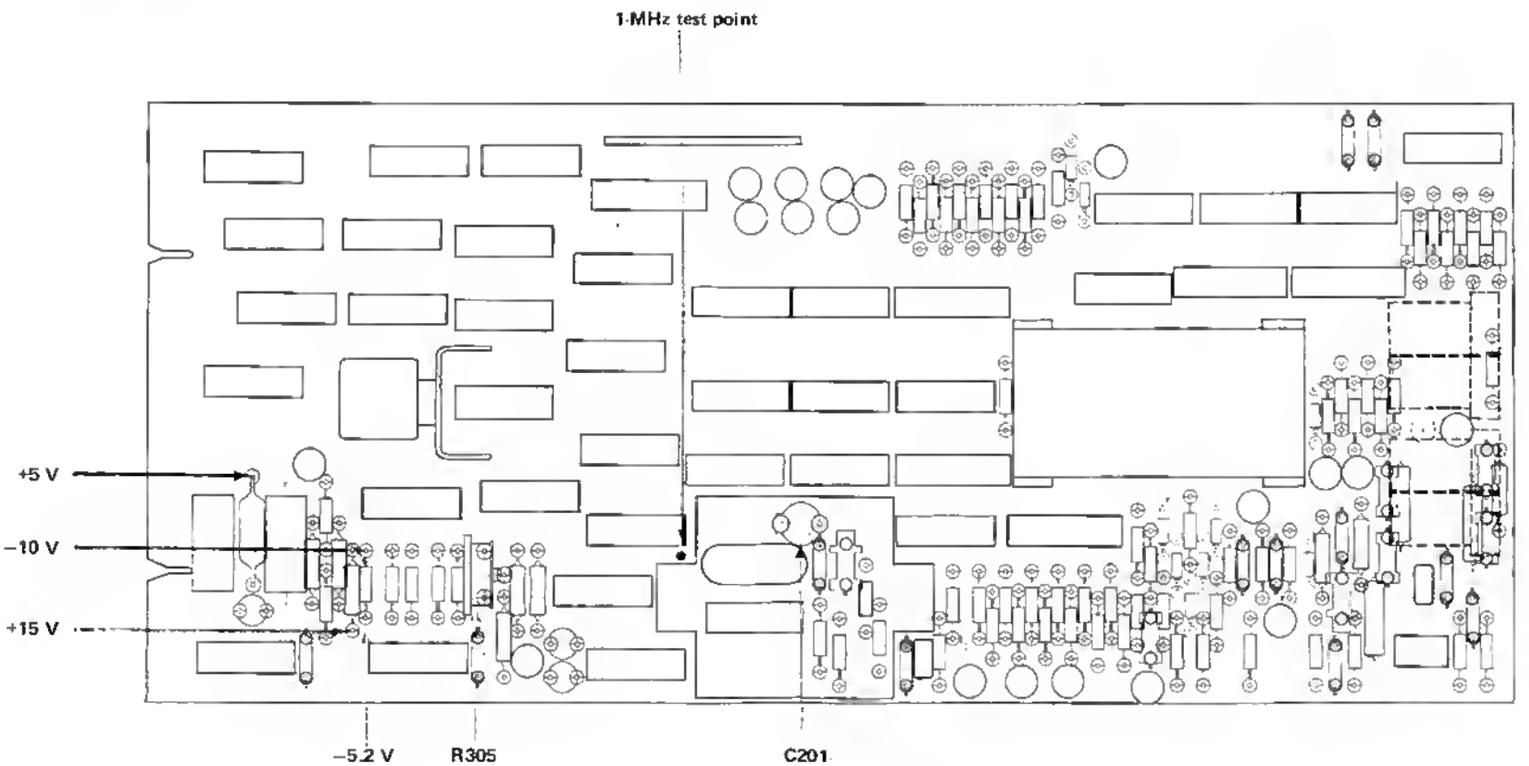

FRONT-PANEL CONTROLS AND CONNECTORS

Time-Base Frequency Check and Adjustment. Connect the DC 501 1-MHz time base reference and the secondary standard to the oscilloscope as shown. Adjust the oscilloscope to display several complete cycles.

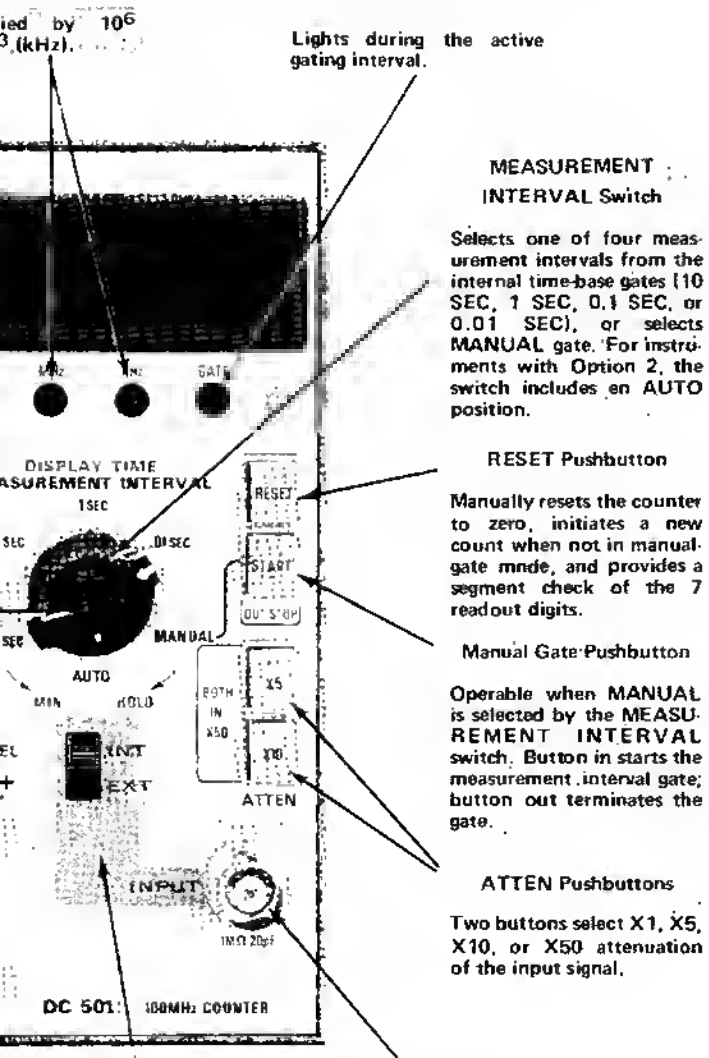

To determine oscillator error, observe the rate of horizontal drift of the displayed waveform. Waveform moving to the right indicates that the time-base frequency is <1 MHz; to the left, > 1 MHz. The period in seconds for the waveform to move the width of one cycle is equal to the frequency difference in parts in 10^6. For example, if the waveform drifts to the right at a rate of one cycle's width every 10 seconds, the time-base frequency is 0.1 part in 10^6 low. Maximum allowable frequency difference is 1 part in 10^5 (5 parts in 10^7 for the optional 5 MHz crystal). Adjust C201 for no drift.

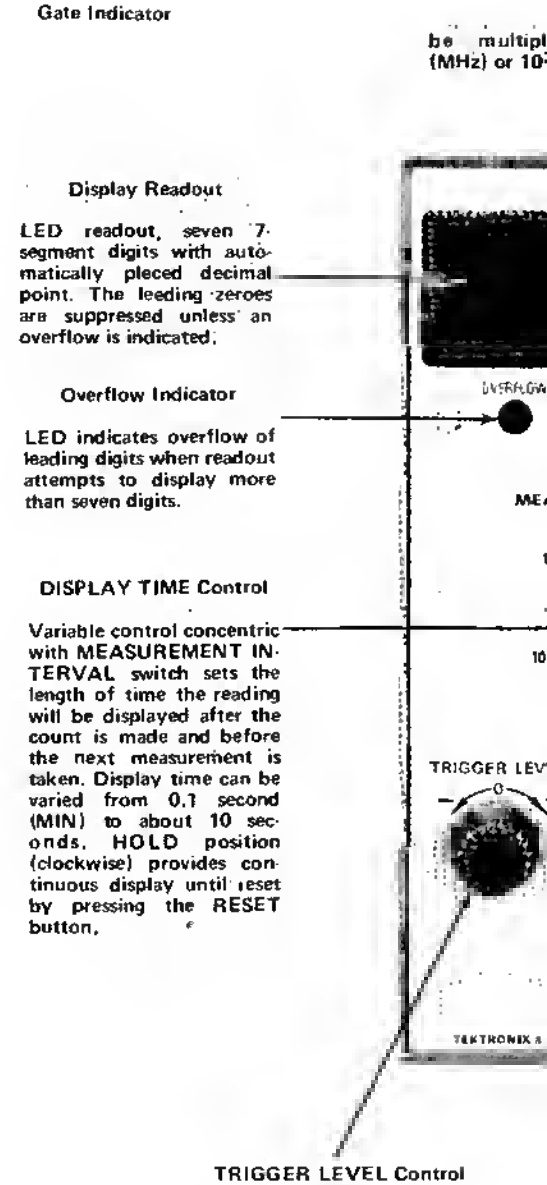

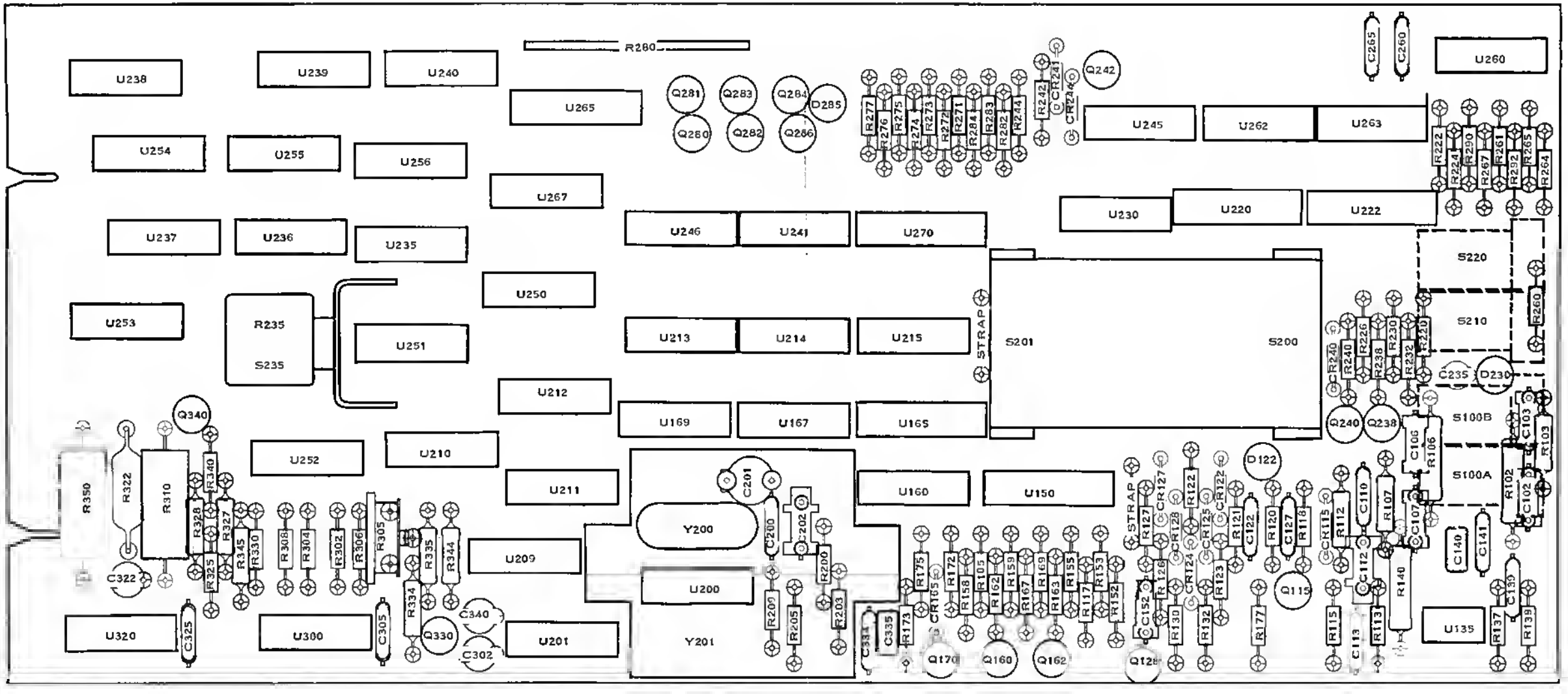

NOTE. COMPONENTS SHOWN WITH DASHED LINES ARE LOCATED ON BACK SIDE OF BOARD.

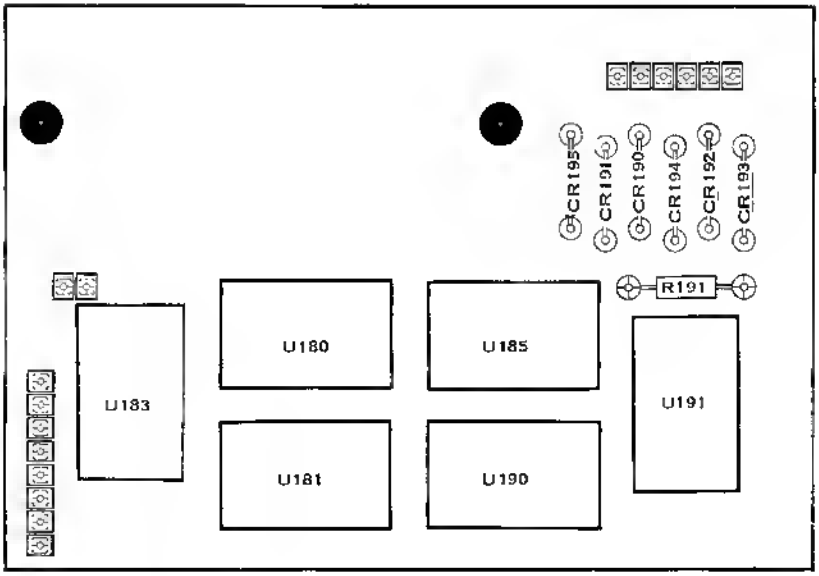
CR195
CR191
CR190
CR194
CR192
CR193
R191
U183
U180
U185
U191
U181
U190

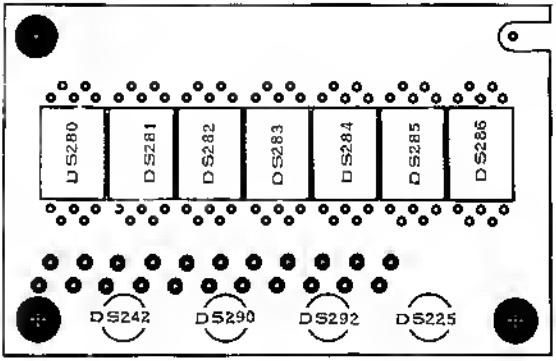
DS280
DS281
DS282
DS283
DS284
DS285
DS286
DS242
DS290
DS292
DS225

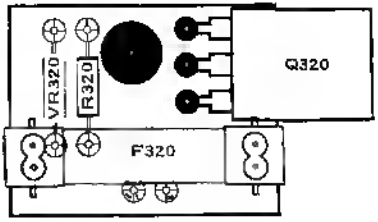
VR320
R320
Q320
F320

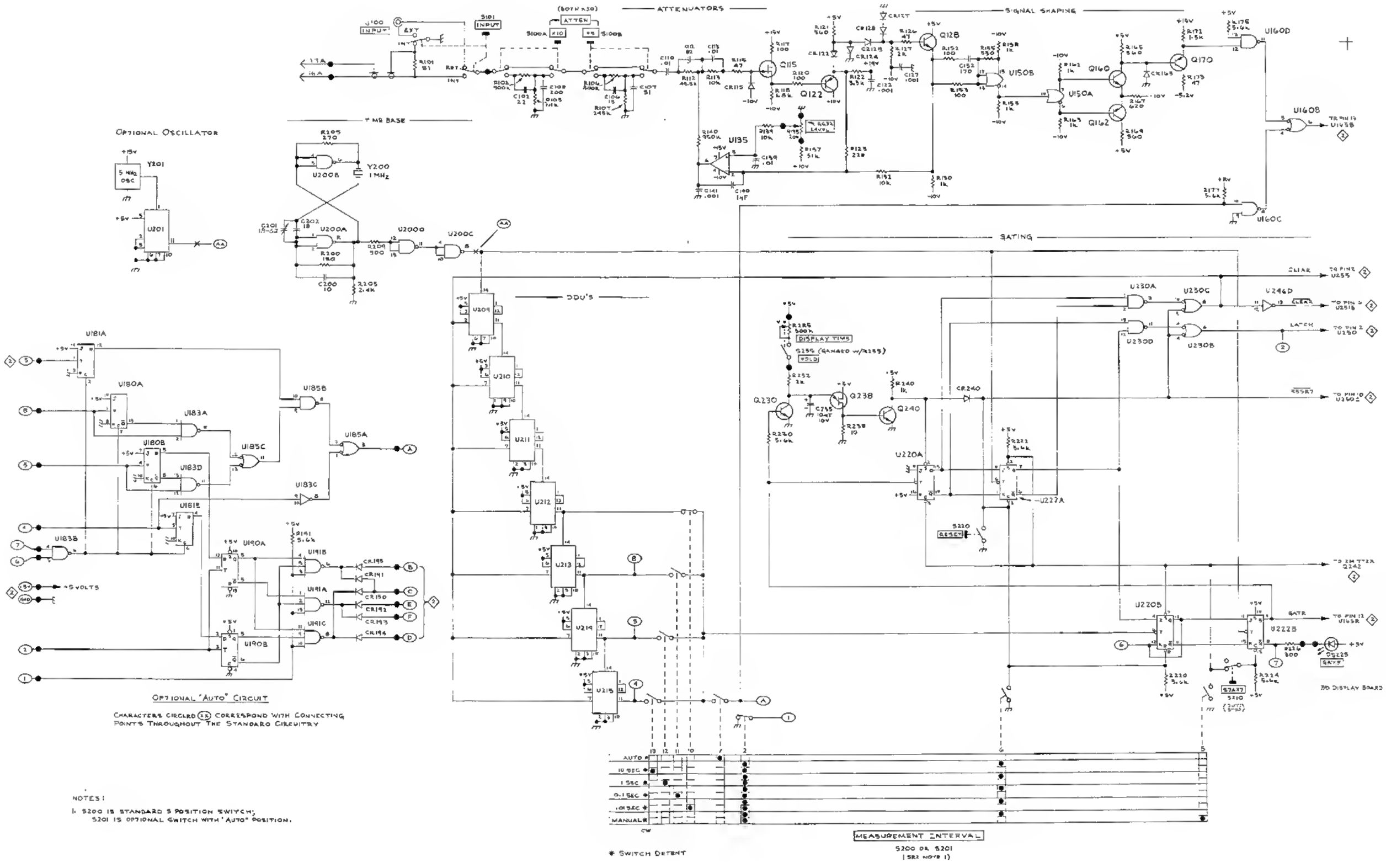
ATTENUATORS
SIGNAL SHAPING
TIME BASE
GATING
DDU'S
OPTIONAL OSCILLATOR
OPTIONAL "AUTO" CIRCUIT
CHARACTERS CIRCLED (1X) CORRESPOND WITH CONNECTING POINTS THROUGHOUT THE STANDARD CIRCUITRY
NOTES:
1. S200 IS STANDARD 5 POSITION SWITCH; S201 IS OPTIONAL SWITCH WITH "AUTO" POSITION.
* SWITCH DETENT
MEASUREMENT INTERVAL
S200 OR S201 (SEE NOTE 1)
TO DISPLAY BOARD
CLEAR
LATCH
GATE
AUTO
10 SEC
1 SEC
0.1 SEC
.01 SEC
MANUAL
CW
+5 VOLTS

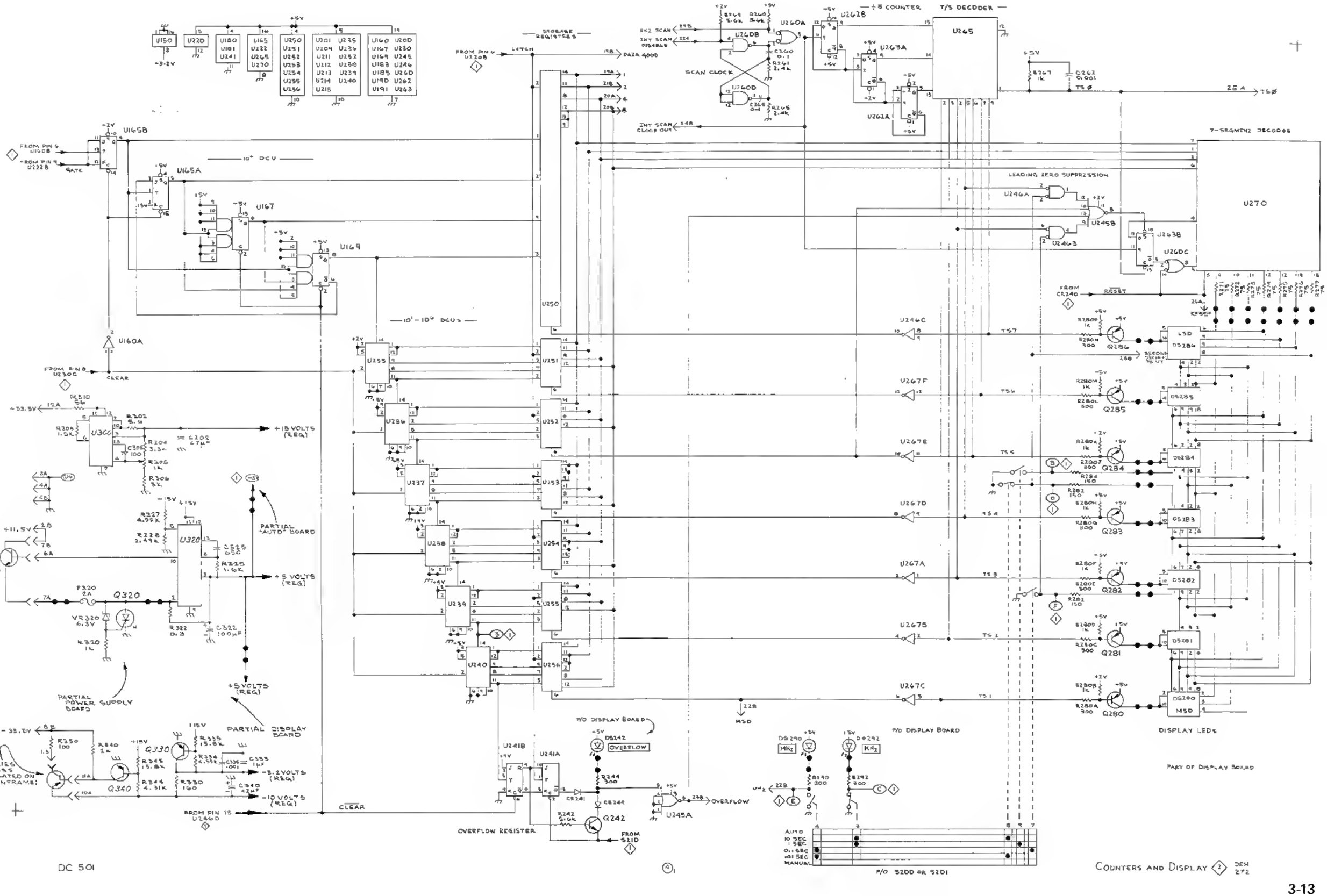

÷8 COUNTER
T/S DECODER
U265
U262B
U263A
U262A
U260A
U260B
U260D
SCAN CLOCK
STORAGE REGISTERS
U250
U251
U252
U253
U254
U255
U256
U257
U258
U259
U240
U241A
U241B
U245A
U246A
U246B
U246C
U267F
U267E
U267D
U267A
U267B
U267C
U263B
U260C
U270
7-SEGMENT DECODER
LEADING ZERO SUPPRESSION
U165B
U165A
U167
U169
U160A
U300
U320
Q320
Q330
Q340
Q242
Q286
Q285
Q284
Q283
Q282
Q281
Q280
DS286
DS285
DS284
DS283
DS282
DS281
DS280
DS242
OVERFLOW
OVERFLOW REGISTER
P/O DISPLAY BOARD
DISPLAY LEDS
PART OF DISPLAY BOARD
P/O S200 OR S201
AUTO
10 SEC
1 SEC
0.1 SEC
.01 SEC
MANUAL
+15 VOLTS (REG)
+5 VOLTS (REG)
-3.2 VOLTS (REG)
-10 VOLTS (REG)
PARTIAL "AUTO" BOARD
PARTIAL POWER SUPPLY BOARD
PARTIAL DISPLAY BOARD
SERIES PASS (LOCATED ON MAINFRAME)
CLEAR
FROM PIN 6 U220B
FROM PIN 8 U230C
FROM PIN 13 U246D
FROM CR240
RESET
DC 501
COUNTERS AND DISPLAY
DEH 272

ELECTRICAL PARTS LIST

Replacement parts should be ordered from the Tektronix Field Office or Representative in your area. Changes to Tektronix products give you the benefit of improved circuits and components. Please include the instrument type number and serial number with each order for parts or service.

ABBREVIATIONS AND REFERENCE DESIGNATORS

A	Assembly, separable or repairable	FL	Filter	PTM	paper or plastic, tubular molded
AT	Attenuator, fixed or variable	H	Heat dissipating device (heat sink, etc.)	R	Resistor, fixed or variable
B	Motor	HR	Heater	RT	Thermistor
BT	Battery	J	Connector, stationary portion	S	Switch
C	Capacitor, fixed or variable	K	Relay	T	Transformer
Cer	Ceramic	L	Inductor, fixed or variable	TP	Test point
CR	Diode, signal or rectifier	LR	Inductor/resistor combination	U	Assembly, inseparable or non-repairable
CRT	cathode-ray tube	M	Meter	V	Electron tube
DL	Delay line	Q	Transistor or silicon-controlled rectifier	Var	Variable
DS	Indicating device (lamp)	P	Connector, movable portion	VR	Voltage regulator (zener diode, etc.)
Elect.	Electrolytic	PMC	Paper, metal cased	WW	wire-wound
EMC	electrolytic, metal cased	PT	paper, tubular	Y	Crystal
EMT	electrolytic, metal tubular				
F	Fuse				

COUNTER TIME BASE AND CONTROL ⚠1

Ckt No.	Grid Loc	Tektronix Part No.	Serial/Model No. Eff	Disc	Description
ASSEMBLY					
A1		670-2102-00			MAIN Circuit Board Assembly (part of)
A2		670-2103-00			DISPLAY Circuit Board Assembly (part of)
A3		670-2249-00			AUTO-GATE Circuit Board Assembly (Option 2)
CAPACITORS					
C102	M5	281-0510-00			22 pF, Cer, 500 V, 20%
C103	M4	281-0605-00			200 pF, Cer, 500 V,
C106	L4	281-0509-00			15 pF, Cer, 500 V, 10%
C107	L5	281-0540-00			51 pF, Cer, 500 V, 5%
C110	L5	283-0068-00			0.01 µF, Cer, 500 V, +100%-0%
C112	L5	281-0571-00			82 pF, Cer, 500 V, 20%
C113	L6	283-0003-00			0.01 µF, Cer, 150 V, +80%-20%
C122	K5	283-0000-00			0.001 µF, Cer, 500 V, +100%-0%
C127	K5	283-0000-00			0.001 µF, Cer, 500 V, +100%-0%
C139	M5	283-0003-00			0.01 µF, Cer, 150 V, +80%-20%
C140	M5	283-0177-00			1 µF, Cer, 25 V, +80%-20%
C141	M5	283-0000-00			0.001 µF, Cer, 500 V, +100%-0%
C152	J6	281-0589-00			170 pF, Cer, 500 V, 5%
C200	G5	281-0504-00			10 pF, Cer, 500 V, 10%
C201	G5	281-0166-00			1.9-15.7 pF, Var, Air
C202	G5	281-0739-00			18 pF, Cer, 500 V
C235	M4	290-0536-00			10 µF, Elect., 25 V, 20%
DIODES					
CR115	K5	152-0141-02			Silicon, replaceable by 1N4152
CR122	K5	152-0141-02			Silicon, replaceable by 1N4152
CR124	J5	152-0141-02			Silicon, replaceable by 1N4152
CR125	J5	152-0141-02			Silicon, replaceable by 1N4152
CR127	J5	152-0141-02			Silicon, replaceable by 1N4152
CR128	J5	152-0141-02			Silicon, replaceable by 1N4152
CR165	H6	152-0141-02			Silicon, replaceable by 1N4152

COUNTER TIME BASE AND CONTROL ⓘ (cont)

Ckt No.	Grid Loc	Tektronix Part No.	Serial/Model No. Eff	Disc	Description
DIODES (cont)					
CR190[1]	Q2	152-0141-02			Silicon, replaceable by 1N4152
CR191[1]	Q2	152-0141-02			Silicon, replaceable by 1N4152
CR192[1]	R2	152-0141-02			Silicon, replaceable by 1N4152
CR193[1]	R2	152-0141-02			Silicon, replaceable by 1N4152
CR194[1]	R2	152-0141-02			Silicon, replaceable by 1N4152
CR195[1]	Q2	152-0141-02			Silicon, replaceable by 1N4152
CR225	06	150-1001-00			Light emitting diode
CR240	L4	152-0141-02			Silicon, replaceable by 1N4152
CONNECTOR					
J100	Chassis	131-0955-00			Receptacle, electrical BNC
TRANSISTORS					
Q115	K5	151-1022-00			Silicon, FET, selected from 2N4392
Q122	K4	151-0325-00			Silicon, PNP, replaceable by 2N4258
Q128	J6	151-0259-00			Silicon, NPN, selected from 2N3563
Q160	I6	151-0190-00			Silicon, NPN, replaceable by 2N3904 or TE3904
Q162	I6	151-0190-00			Silicon, NPN, replaceable by 2N3904 or TE3904
Q170	H6	151-0325-00			Silicon, PNP, replaceable by 2N4258
Q230	M4	151-0341-00			Silicon, NPN, replaceable by 2N3565
Q238	L4	151-0504-00			Silicon, Unijunction, replaceable by 2N4851
Q240	L4	151-0341-00			Silicon, NPN, replaceable by 2N3565
RESISTORS					
R102	M5	323-0611-00			900 kΩ, 1/2 W, 1%
R103	M4	321-0617-00			111 kΩ, 1/8 W, 1%
R106	L4	323-0620-00			800 kΩ, 1/2 W, 1%
R107	L5	321-0423-00			249 kΩ, 1/8 W, 1%
R112	L5	321-0356-00			49.9 kΩ, 1/8 W, 1%
R113	L6	315-0103-00			10 kΩ, 1/4 W, 5%
R115	L6	315-0470-00			47 Ω, 1/4 W, 5%
R117	J6	315-0101-00			100 Ω, 1/4 W, 5%
R118	K5	315-0182-00			1.8 kΩ, 1/4 W, 5%
R120	K5	315-0101-00			100 Ω, 1/4 W, 5%
R121	K5	315-0561-00			560 Ω, 1/4 W, 5%
R122	J5	315-0332-00			3.3 kΩ, 1/4 W, 5%
R123	K5	315-0223-00			22 kΩ, 1/4 W, 5%
R126	J5	315-0470-00			47 Ω, 1/4 W, 5%
R127	J5	315-0202-00			2 kΩ, 1/4 W, 5%
R130	J6	315-0102-00			1 kΩ, 1/4 W, 5%
R132	K6	315-0103-00			10 kΩ, 1/4 W, 5%
R137	M6	315-0513-00			51 kΩ, 1/4 W, 5%
R139	M6	315-0103-00			10 kΩ, 1/4 W, 5%
R140	L5	323-0612-00			950 kΩ, 1/4 W, 1%
R152	J6	315-0101-00			100 Ω, 1/4 W, 5%
R153	J5	315-0101-00			100 Ω, 1/4 W, 5%
R155	I5	315-0331-00			330 Ω, 1/4 W, 5%
R158	I5	315-0102-00			1 kΩ, 1/4 W, 5%
R159	I5	315-0102-00			1 kΩ, 1/4 W, 5%
R162	I6	315-0102-00			1 kΩ, 1/4 W, 5%
R163	I6	315-0102-00			1 kΩ, 1/4 W, 5%
R165	I5	315-0561-00			560 Ω, 1/4 W, 5%
R167	I6	315-0621-00			620 Ω, 1/4 W, 5%
R169	I5	315-0561-00			560 Ω, 1/4 W, 5%

[1]Option 2 only.

COUNTER TIME BASE AND CONTROL ① (cont)

Ckt No.	Grid Loc	Tektronix Part No.	Serial/Model No. Eff	Disc	Description
RESISTORS (cont)					
R172	H5	315-0152-00			1.5 kΩ, 1/4 W, 5%
R173	H6	315-0470-00			47 Ω, 1/4 W, 5%
R175	H5	315-0562-00			5.6 kΩ, 1/4 W, 5%
R177[1]	K6	315-0562-00			5.6 kΩ, 1/4 W, 5%
R191[1]	R2	315-0562-00			5.6 kΩ, 1/4 W, 5%
R200	G5	315-0181-00			180 kΩ, 1/4 W, 5%
R203	H6	315-0242-00			2.4 kΩ, 1/4 W, 5%
R205	G6	315-0271-00			270 Ω, 1/4 W, 5%
R209	G6	315-0301-00			300 Ω, 1/4 W, 5%
R220	L3	315-0562-00			5.6 kΩ, 1/4 W, 5%
R222	L2	315-0562-00			5.6 kΩ, 1/4 W, 5%
R224	M2	315-0562-00			5.6 kΩ, 1/4 W, 5%
R226	L3	315-0301-00			300 Ω, 1/4 W, 5%
R230	L3	315-0562-00			5.6 kΩ, 1/4 W, 5%
R232[2]	L4	315-0202-00			2 kΩ, 1/4 W, 5%
R235[2]	C3	311-1342-00			500 kΩ, Var
R238	L4	315-0100-00			10 kΩ, 1/4 W, 5%
R240	L4	315-0102-00			1 kΩ, 1/4 W, 5%
SWITCHES					
S100A S100B	M5 M4	260-1353-01			Pushbutton, ATTENUATOR
S200[1]	K3	105-0354-00			Actuator assembly, MEASUREMENT INTERVAL
S201[1]	I3	105-0356-00			Actuator assembly, MEASUREMENT INTERVAL
S210 S220[2] S235[2]	M3 M3 C4	260-1425-00			Push, START RESET
INTEGRATED CIRCUITS					
U135	M6	156-0067-00			Operational amplifier, replaceable by UA741C
U150	I5	156-0182-00			Type 2-3-2 input gate, replaceable by MC10105
U160[1]	H5	156-0180-00			Quad 2-input nand gate, replaceable by SN74500N
U180[1]	P3	156-0039-00			Dual 15 MHz J-K master-slave flip-flop, replaceable by SN7473N
U181[1]	P3	156-0039-00			Dual 15 MHz J-K master-slave flip-flop, replaceable by SN7473N
U183[1]	O3	156-0030-00			Quad 2-input positive nand gate, replaceable by SN74
U185[1]	Q3	156-0030-00			Quad 2 input positive nand gate, replaceable by SN74
U190[1]	Q3	156-0041-00			Dual 15 MHz D-type pos-edg-trig flip-flop, replaceab by SN7474N
U191[1]	R3	156-0047-00			Triple 3-input positive nand gate, replaceable by SN7410N
U200[3]	F5	156-0030-00			Quad 2-input positive nand gate, replaceable by SN74
U201[3]	E6	156-0079-00			Single 10 MHz divide-by-2-&-5 ripple counter, replac by SN7490N
U209	E5	156-0079-00			Single 10 MHz divide-by-2-&-5 ripple counter, replac by SN7490N
U210	D4	156-0079-00			Single 10 MHz divide-by-2-&-5 ripple counter, replac by SN7490N
U211	E5	156-0079-00			Single 10 MHz divide-by-2-&-5 ripple counter, replaceable by SN7490N
U212	E4	156-0079-00			Single 10 MHz divide-by-2-&-5 ripple counter, replaceable by SN7490N

[1] Option 2 only.
[2] Furnished as a unit with R235.
[3] Option 1 only.

COUNTER TIME BASE AND CONTROL ① (cont)

Ckt No.	Grid Loc	Tektronix Part No.	Serial/Model No. Eff	Disc	Description
INTEGRATED CIRCUITS (cont)					
U213	F3	156-0079-00			Single 10 MHz divide-by-2-&-5 ripple counter, replaceable by SN7490N
U214	G3	156-0079-00			Single 10 MHz divide-by-2-&-5 ripple counter, replaceable by SN7490N
U215	H3	156-0079-00			Single 10 MHz divide-by-2-&-5 ripple counter, replaceable by SN7490N
U220	K2	156-0042-00			Dual 15 MHz J-K master-slave flip-flop, replaceable by SN7476N
U222	L2	156-0174-00			Dual 20 MHz J-K master-slave flip-flop, replaceable by SN74111N
U230	J2	156-0150-00			Quad 2-input positive nand buffer, replaceable by SN7437N
CRYSTALS					
Y200[1]	F5	158-0079-00			Crystal, 1 MHz
Y201[1]	F6	119-0262-00			Oscillator, RF, 5 MHz

[1]Option 1 only.

COUNTERS AND DISPLAY ④

Ckt No.	Grid Loc	Tektronix Part No.	Serial/Model No. Eff	Disc	Description
ASSEMBLIES					
A1		670-2102-00			MAIN Circuit Board Assembly (part of)
A2		670-2103-00			DISPLAY Circuit Board Assembly (part of)
CAPACITORS					
C260	L1	283-0111-00			0.1 µP, Cer, 50 V
C265	L1	283-0111-00			0.1 µF, Cer, 50 V
C302	E6	290-0529-00			47 µF, Elect., 20 V, 20%
C305	D6	283-0060-00			100 pF, Cer, 200 V, 5%
C322	B5	290-0531-00			100 µF, Elect., 10 V, 20%
C325	B6	283-0150-00			650 pF, Cer, 200 V, 5%
C334	H6	283-0000-00			0.001 µF, Cer, 500 V, +100%-0%
C335	H6	283-0177-00			1 µF, Cer, 25 V, +80%-20%
C340	E6	290-0529-00			47 µF, Elect., 20 V, 20%
DIODES					
CR241	I1	152-0141-02			Silicon, replaceable by 1N4152
CR242	P6	150-1001-00			Light emitting diode
CR244	I2	152-0141-02			Silicon, replaceable by 1N4152
CR280	N5	150-1002-00			Numerical display diode
CR281	O5	150-1002-00			Numerical display diode
CR282	O5	150-1002-00			Numerical display diode
CR283	O5	150-1002-00			Numerical display diode
CR284	P5	150-1002-00			Numerical display diode
CR285	P5	150-1002-00			Numerical display diode
CR286	Q5	150-1002-00			Numerical display diode
CR290	P6	150-1001-00			Light emitting diode
CR292	O6	150-1001-00			Light emitting diode
TRANSISTORS					
Q242	J1	151-0341-00			Silicon, NPN, replaceable by 2N3565
Q280	F2	151-0301-00			Silicon, PNP, replaceable by 2N2907
Q281	F2	151-0301-00			Silicon, PNP, replaceable by 2N2907
Q282	G2	151-0301-00			Silicon, PNP, replaceable by 2N3907
Q283	G2	151-0301-00			Silicon, PNP, replaceable by 2N3907
Q284	G2	151-0301-00			Silicon, PNP, replaceable by 2N3907
Q285	G2	151-0301-00			Silicon, PNP, replaceable by 2N3907
Q286	G2	151-0301-00			Silicon, PNP, replaceable by 2N3907
Q330	D6	151-0342-00			Silicon, PNP, replaceable by 2N4249
Q340	B4	151-0342-00			Silicon, PNP, replaceable by 2N4249
RESISTORS					
R242	I2	315-0562-00			5.6 kΩ, 1/4 W, 5%
R244	I2	315-0301-00			300 Ω, 1/4 W, 5%
R260	M3	315-0562-00			5.6 kΩ, 1/4 W, 5%
R261	M2	315-0242-00			2.4 kΩ, 1/4 W, 5%
R264	M2	315-0562-00			5.6 kΩ, 1/4 W, 5%
R265	M2	315-0242-00			2.4 kΩ, 1/4 W, 5%
R267	M2	315-0102-00			1 kΩ, 1/4 W, 5%
R271	H2	315-0750-00			75 Ω, 1/4 W, 5%
R272	H2	315-0750-00			75 Ω, 1/4 W, 5%
R273	H2	315-0750-00			75 Ω, 1/4 W, 5%

COUNTERS AND DISPLAY ② (cont)

Ckt No.	Grid Loc	Tektronix Part No.	Serial/Model No. Eff	Disc	Description
RESISTORS (cont)					
R274	H2	315-0750-00			75 Ω, 1/4 W, 5%
R275	H2	315-0750-00			75 Ω, 1/4 W, 5%
R276	H2	315-0750-00			75 Ω, 1/4 W, 5%
R277	H2	315-0750-00			75 Ω, 1/4 W, 5%
R280A	F1				300 Ω,
R280B	F1				1 kΩ,
R280C	F1				300 Ω,
R280D [1]	F1	307-0357-00			1 kΩ, Thick film, 7 section divider
R280E	F1				300 Ω,
R280F	F1				1 kΩ,
R280G	F1				300 Ω,
R280H	F1				1 kΩ,
R280J	F1				300 Ω,
R280K	F1				1 kΩ,
R280L [1]	F1	307-0357-00			300 Ω, Thick film, 7 section divider
R280M	F1				1 kΩ,
R280N	F1				300 Ω,
R280P	F1				1 kΩ,
R282	I2	315-0151-00			150 Ω, 1/4 W, 5%
R283	I2	315-0151-00			150 Ω, 1/4 W, 5%
R284	I2	315-0151-00			150 Ω, 1/4 W, 5%
R290	M2	315-0301-00			300 Ω, 1/4 W, 5%
R292	M2	315-0301-00			300 Ω, 1/4 W, 5%
R302	C5	307-0107-00			5.6 Ω, 1/4 W, 5%
R304	C5	315-0332-00			3.3 kΩ, 1/4 W, 5%
R305	D5	311-1408-00			1 kΩ, Var
R306	D5	315-0302-00			3 kΩ, 1/4 W, 5%
R308	C5	315-0152-00			1.5 kΩ, 1/4 W, 5%
R310	B5	306-0560-00			56 Ω, 2 W, 10%
R322	B5	308-0463-00			0.3 Ω, 3 W, WW, 1%
R325	B5	315-0162-00			1.6 kΩ, 1/4 W, 5%
R327	C5	321-0260-00			4.99 kΩ, 1/8 W, 1%
R328	B5	321-0231-00			2.49 kΩ, 1/8 W, 1%
R330	C5	315-0161-00			160 Ω, 1/4 W, 5%
R334	D5	321-0256-00			4.53 kΩ, 1/8 W, 1%
R335	D5	321-0308-00			15.8 kΩ, 1/8 W, 1%
R340	B5	315-0202-00			2 kΩ, 1/4 W, 5%
R344	D5	321-0286-00			9.31 kΩ, 1/8 W, 1%
R345	C5	321-0308-00			15.8 kΩ, 1/8 W, 1%
R350	A5	305-0101-00			100 Ω, 2 W, 5%
SWITCHES					
S200 [2]					
S201					

[1] R280A-R280P furnished as a unit.
[2] See Electrical Parts List and Schematic ①

COUNTERS AND DISPLAY ② (cont)

Ckt No.	Grid Loc	Tektronix Part No.	Seriol/Model No. Eff	Disc	Description
INTEGRATED CIRCUITS					
U165	H4	156-0118-00			Dual 100 MHz J-K master-slave flip-flop, replaceable by SN74S112
U167	G4	156-0100-00			Single 40 MHz J-K edge-triggered flip-flop, replaceal by SN74H102
U169	F4	156-0100-00			Single 40 MHz J-K edge-triggered flip-flop, replaceal by SN74H102
U235	D3	156-0079-00			Single 10 MHz divide-by-2-&-5 ripple counter, replaceable by SN7490N
U236	C3	156-0079-00			Single 10 MHz divide-by-2-&-5 ripple counter, replaceable by SN7490N
U237	B3	156-0079-00			Single 10 MHz divide-by-2-&-5 ripple counter, replaceable by SN7490N
U238	B1	156-0079-00			Single 10 MHz divide-by-2-&-5 ripple counter, replaceable by SN7490N
U239	C1	156-0079-00			Single 10 MHz divide-by-2-&-5 ripple counter, replaceable by SN7490N
U240	D1	156-0079-00			Single 10 MHz divide-by-2-&-5 ripple counter, replaceable by SN7490N
U241	G3	156-0039-00			Dual 15 MHz J-K master-slave flip-flop, replaceable by SN7473N
U245	J2	156-0165-00			Dual 4-input positive nor gates, replaceable by SN7425N
U246	F3	156-0043-00			Quad 2-input positive nor gate, replaceable by SN740
U250	E3	156-0198-00			Quad latch, replaceable by MC4035P
U251	D4	156-0198-00			Quad latch, replaceable by MC4035P
U252	C4	156-0198-00			Quad latch, replaceable by MC4035P
U253	B3	156-0198-00			Quad latch, replaceable by MC4035P
U254	B2	156-0198-00			Quad latch, replaceable by MC4035P
U255	C2	156-0198-00			Quad latch, replaceable by MC4035P
U256	D2	156-0198-00			Quad latch, replaceable by MC4035P
U260	M1	156-0030-00			Quad 2-input positive nand gate, replaceable by SN7400N
U262	K2	156-0041-00			Dual 15 MHz D-type pos-edge-trig flip-flop, replaceal by SN7474N
U263	L2	156-0041-00			Dual 15 MHz D-type pos-edge-trig flip-flop, replaceable by SN7474N
U265	E2	156-0111-00			Single BCD-to-decimal decoder/driver, replaceable by SN74145N
U267	E2	156-0058-00			Hex. inverter, replaceable by SN7404N
U270	H3	156-0128-00			Single BCD-to-seven-segment decoder/driver, replaceal by SN7447N
U300	C6	156-0071-00			Voltage regulator, replaceable by UA723C
U320	B6	156-0071-00			Voltage regulator, replaceable by UA723C

MECHANICAL PARTS LIST

Replacement parts should be ordered from the Tektronix Field Office or Representative in your area. Changes to Tektronix products give you the benefit of improved circuits and components. Please include the instrument type number and serial number with each order for parts or service.

ABBREVIATIONS

BHB	binding head brass	h	height or high	OHB	oval head brass
BHS	binding head steel	hex.	hexagonal	OHS	oval head steel
CRT	cathode-ray tube	HHB	hex head brass	PHB	pan head brass
csk	countersunk	HHS	hex head steel	PHS	pan head steel
DE	double end	HSB	hex socket brass	RHS	round head steel
FHB	flat head brass	HSS	hex socket steel	SE	single end
FHS	flat head steel	ID	inside diameter	THB	truss head brass
Fil HB	fillister head brass	lg	length or long	THS	truss head steel
Fil HS	fillister head steel	OD	outside diameter	w	wide or width

FIGURE 1 EXPLODED & OPTION NO. 2

Fig. & Index No.	Tektronix Part No.	Serial/Model No. Eff	Serial/Model No. Disc	Qty 1 2 3 4 5	Description
1-1	366-1031-00			1	KNOB, red--DISPLAY TIME
	- - - - - -			-	knob includes:
	213-0153-00			1	SETSCREW, 5-40 x 0.125 inch, HSS
-2	366-1165-00			1	KNOB, gray--MEASUREMENT INTERVAL
	- - - - - -			-	knob includes:
	213-0153-00			2	SETSCREW, 5-40 x 0.125 inch, HSS
-3	366-0494-00			1	KNOB, gray--TRIGGER
	- - - - - -			-	knob includes:
	213-0153-00			1	SETSCREW, 5-40 x 0.125 inch, HSS
-4	366-1257-30			1	PUSHBUTTON--RESET
-5	366-1402-01			1	PUSHBUTTON--START
-6	366-1402-00			1	PUSHBUTTON--X5
-7	366-1257-87			1	PUSHBUTTON--X10
-8	366-1422-00			1	KNOB, latch
-9	131-0955-00			1	CONNECTOR, receptacle, BNC, w/hardware
	- - - - - -			-	mounting hardware: (not included w/connector)
-10	210-0255-00			1	LUG, solder, 0.375 inch, diameter, SE
-11	- - - - - -			1	RESISTOR, variable
	- - - - - -			-	mounting hardware: (not included w/resistor)
-12	210-0583-00			1	NUT, hex., 0.25-32 x 0.312 inch
-13	210-0940-00			1	WASHER, flat, 0.25 ID x 0.375 inch OD
-14	210-0046-00			1	WASHER, lock, internal, 0.261 ID x 0.40 inch OD
-15	426-0916-00			1	FRAME, readout window
-16	331-0314-00			1	WINDOW, readout
-17	426-0681-00			4	FRAME, pushbutton
-18	333-1584-00			1	PANEL, front
	- - - - - -			-	mounting hardware: (not included w/panel)
-19	211-0159-00			2	SCREW, 2-56 x 0.375 inch, PHS
-20	210-0405-00			2	NUT, hex., 2-56 x 0.188 inch

FIGURE 1 EXPLODED & OPTION NO. 2 (cont)

Fig. & Index No.	Tektronix Part No.	Seriol/Model No. Eff	Seriol/Model No. Disc	Qty	1 2 3 4 5	Description
1-21	337-1399-00			2		SHIELD, electrical, side
-22	214-1513-00			1		LATCH, plug-in retainer
	- - - - - -			-		mounting hardware: (not included w/latch)
-23	213-0254-00			1		SCREW, thread forming, 2-56 x 0.25 inch, 100° csk, FHS
-24	386-2292-00			1		SUBPANEL, front
	- - - - - -			-		mounting hardware: (not included w/subpanel)
-25	213-0229-00			4		SCREW, thread forming, 6-20 x 0.375 inch, 100° csk, FHS
-26	337-1646-00			1		SHIELD, electrical, subpanel
-27	- - - - - -			1		CIRCUIT BOARD ASSEMBLY--DISPLAY (See A2 electrical list)
-28	179-1767-00			1		WIRING HARNESS
-29	- - - - - -			1		CIRCUIT BOARD ASSEMBLY--MAIN (See A1 electrical list)
	- - - - - -			-		circuit board assembly includes:
-30	131-0604-00			13		CONTACT, electrical
-31	136-0252-04			16		SOCKET, pin connector
	136-0234-00			2		SOCKET, pin connector
-32	260-1425-00			1		SWITCH, push--START-STOP
-33	361-0382-00			8		SPACER, switch, brown plastic
-34	260-1353-01			1		SWITCH, push—ATTEN
-35	376-0050-00			1		COUPLING
	- - - - - -			-		coupling includes:
	213-0022-00			4		SETSCREW, 4-40 x 0.188 inch, HSS
	354-0251-00			2		RING, coupling
	376-0046-00			1		COUPLING, plastic
-36	384-1146-00			1		SHAFT, extension
-37	- - - - - -			1		RESISTOR, variable
	- - - - - -			-		mounting hardware: (not included w/resistor)
-38	210-0583-00			1		NUT, hex., 0.25-32 x 0.312 inch
-39	210-0046-00			1		WASHER, lock, internal, 0.261 ID x 0.40 inch OD
-40	407-0803-00			1		BRACKET, component
	- - - - - -			-		mounting hardware: (not included w/circuit board assembly)
-41	213-0146-00			4		SCREW, thread forming, 6-20 x 0.312 inch, PHS
	105-0354-00			1		ACTUATOR ASSEMBLY, cam switch
	- - - - - -			-		actuator assembly includes:
-42	200-1391-00			1		COVER
	- - - - - -			-		mounting hardware: (not included w/cover)
-43	211-0022-00			2		SCREW, 2-56 x 0.188 inch, PHS
-44	210-0001-00			2		WASHER, lock, internal, 0.092 ID x 0.18 inch OD
-45	210-0405-00			2		NUT, hex., 2-56 x 0.188 inch

FIGURE 1 EXPLODED & OPTION NO. 2 (cont)

Fig. & Index No.	Tektronix Port No.	Serial/Model No. Eff	Serial/Model No. Disc	Qty	Description 1 2 3 4 5
1-46	354-0219-00			1	RING, retaining
-47	214-1127-00			1	ROLLER, detent
-48	214-1139-00[1]			-	SPRING, flat, gold
	214-1139-02[1]			-	SPRING, flat, green
	214-1139-03[1]			-	SPRING, flat, red
-49	401-0057-00			1	BEARING, front, w/bushing
-50	105-0353-00			1	DRUM ASSEMBLY
-51	401-0056-00			1	BEARING, rear
-52	210-0406-00			4	NUT, hex., 4-40 x 0.188 inch
	- - - - - -			-	mounting hardware: (not included w/actuator assembly)
-53	211-0116-00			4	SCREW, sems, 4-40 x 0.312 inch, PHB
-54	426-0725-00			1	FRAME SECTION, top
-55	426-0724-00			1	FRAME SECTION, bottom
-56	260-0583-00			1	SWITCH, slide--INPUT
	- - - - - -			-	mounting hardware: (not included w/switch)
-57	211-0001-00			2	SCREW, 2-56 x 0.25 inch, PHS
-58	220-0464-00			2	NUT, 2-56 x 0.454 inch long
			OPTION NO. 2		
-59	333-1620-00			1	PANEL, front
-60	- - - - - -			1	CIRCUIT BOARD ASSEMBLY--AUTO-GATE (See A3 electrical list)
	- - - - - -			-	mounting hardware: (not included w/circuit board aasembly)
-61	211-0001-00			2	SCREW, 2-56 x 0.25 inch, PHS
-62	179-1736-00			1	WIRING HARNESS
	105-0356-00			1	ACTUATOR ASSEMBLY
	- - - - - -			-	actuator assembly includes:
-63	200-1391-00			1	COVER
	- - - - - -			-	mounting hardware: (not included w/cover)
	211-0022-00			2	SCREW, (discard & use ref. #58)
-64	210-0001-00			2	WASHER, lock, internal, 0.092 ID x 0.18 inch OD
-65	210-0405-00			2	NUT, hex., 2-56 x 0.188 inch
-66	354-0219-00			1	RING, retaining
-67	401-0057-00			1	BEARING, front, w/bushing
-68	214-1139-00[1]			-	SPRING, flat, gold
	214-1139-02[1]			-	SPRING, flat, green
	214-1139-03[1]			-	SPRING, flat, red
-69	214-1127-00			1	ROLLER, detent
-70	105-0355-00			1	DRUM ASSEMBLY
-71	401-0056-00			1	BEARING, rear
-72	210-0406-00			4	NUT, hex., 4-40 x 0.188 inch

[1]Replace only with part bearing the same color code as the original part in your instrument.

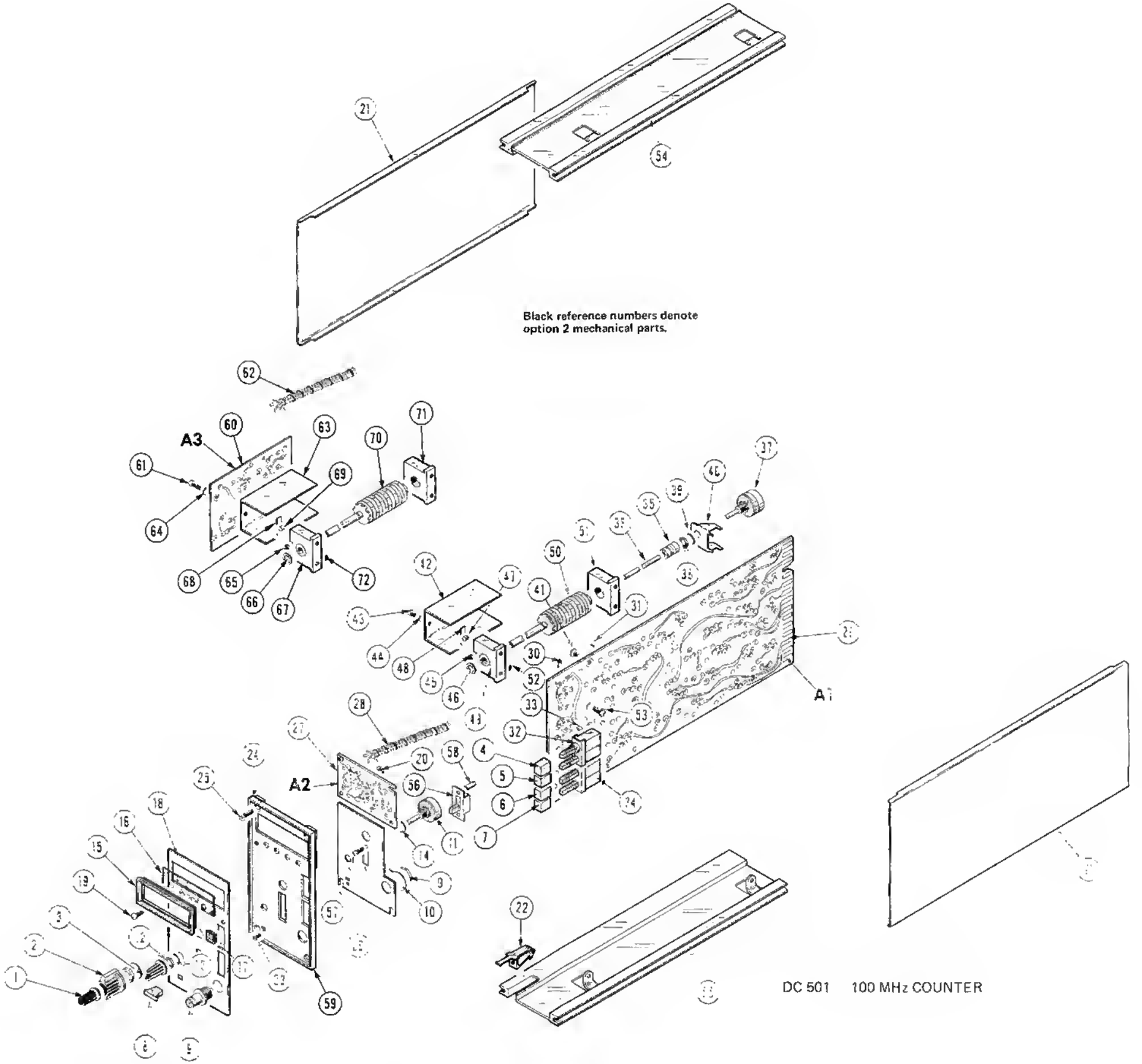

DC 501 100 MHz COUNTER

STANDARD ACCESSORIES

Fig. & Index No.	Tektronix Part No.	Serial/Model No. Eff	Serial/Model No. Disc	Qty	1 2 3 4 5	Description
2-	070-1339-00			1		MANUAL, instruction (not shown)

CARTON ASSEMBLY
(Part No. 065-0151-00)

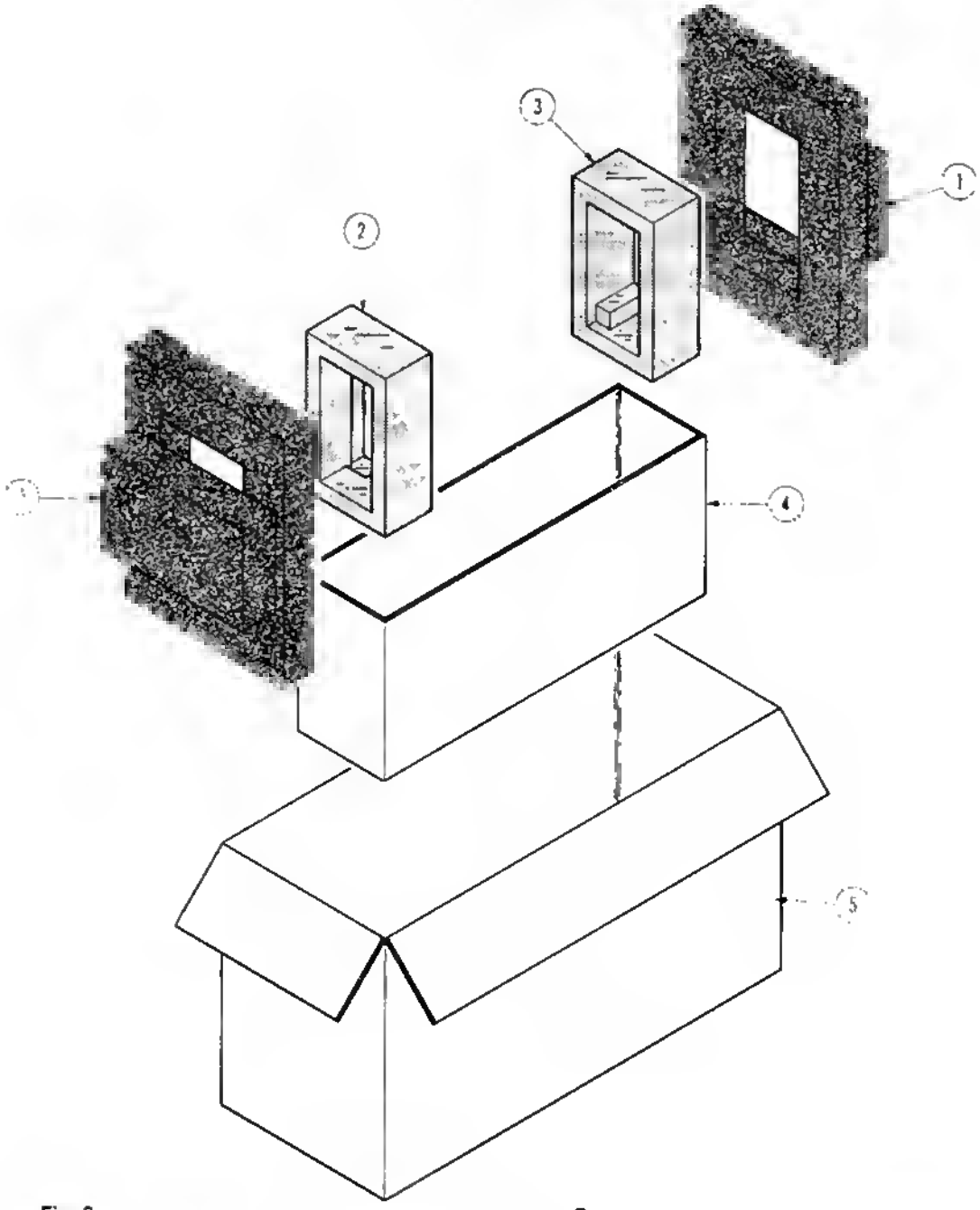

Fig. & Index No.	Tektronix Part No.	Serial/Model No. Eff	Disc	Qty	1 2 3 4 5	Description
2-	065-0151-00			1		CARTON ASSEMBLY
	. . . . .			.		carton assembly includes:
-1	004-0282-00			2		FRAME
-2	004-0243-00			1		END CAP, front
-3	004-0242-00			1		END CAP, rear
-4	004-1093-00			1		PAO SET, 1 piece
-5	004-0612-00			1		CARTON

MANUAL CHANGE INFORMATION

At Tektronix, we continually strive to keep up with latest electronic developments by adding circuit and component improvements to our instruments as soon as they are developed and tested.

Sometimes, due to printing and shipping requirements, we can't get these changes immediately into printed manuals. Hence, your manual may contain new change information on following pages.

A single change may affect several sections. Sections of the manual are often printed at different times, so some of the information on the change pages may already be in your manual. Since the change information sheets are carried in the manual until ALL changes are permanently entered, some duplication may occur. If no such change pages appear in this section, your manual is correct as printed.

ELECTRICAL PARTS LIST CORRECTION

Page 3-6

CHANCE TO:

INDICATOR

DS225	150-1001-01	Light emitting diode

RESISTORS

ADD:

R101	315-0510-00	51 Ω, 1/4 W, 5%
R135	311-1220-00	2 kΩ, Var

Page 3-7

SWITCHES

ADD:

S101	260-0583-00	Slide, DPDT

Page 3-10

ASSEMBLIES

ADD:

A4	670-2708-00	PROTECTION Circuit Board Assembly

CAPACITORS

C267	283-0000-00	0.001 µF, Cer, 500 V, +100%-0%

DIODES

VR320	152-0166-00	Zener, selected from 1N753A, 0.44 6.2V

CHANCE TO:

INDICATORS

DS242	150-1001-01	Light emitting diode
DS280	150-1002-00	Numerical display diode
DS281	150-1002-00	Numerical display diode
DS282	150-1002-00	Numerical display diode
DS283	150-1002-00	Numerical display diode
DS284	150-1002-00	Numerical display diode

INDICATORS (cont.)

DS285	150-1002-00	Numerical display diode
OS286	150-1002-00	Numerical display diode
OS290	150-1001-01	Light emitting diode
DS292	150-1001-01	Light emitting diode

TRANSISTORS

ADO:

Q320	151-0515-01	Thyristor, 50 V 8A, replaceable by 2N4441

FUSE

ADO:

F320	159-0021-00	Cartridge, 0.2A, 3AG, Fast Blo

RESISTORS (Page 3-11)

ADD:

R320	316-0102-00	1 kΩ, 1/4 W, 10%

TEXT CORRECTION

Page 1-3

REPLACE: Internal Time Base table with the following:

INTERNAL TIME BASE

	Standard	Option 1
Crystal Frequency	1 MHz	5 MHz
Stability at 25°C after 1/2 hour warm-up	Within 1 part in 10^5	Within 5 parts in 10^7
Stability (20°C to 50°C) after 1/2 hour warm-up	Within 2 parts in 10^5	
Long-term Drift	2 parts or less in 10^5 per month	1 part or less in 10^7 per month
Accuracy	Adjustable to within 1 part in 10^7	Adjustable to within 5 parts in 10^9

TEXT CORRECTION

The upper limit frequency response specifications has been changed to 110 MHz. Any reference to a 100 MHz should be changed to read: 110 MHz.

DC 501 EFF SN B050000-up

ELECTRICAL PARTS LIST AND SCHEMATIC CHANGES

CHANGE TO:

R310	306-0121-00	120 Ω, 2 W, 10%

ADD:

R303	303-0132-00	1.3 kΩ, 1 W, 5%

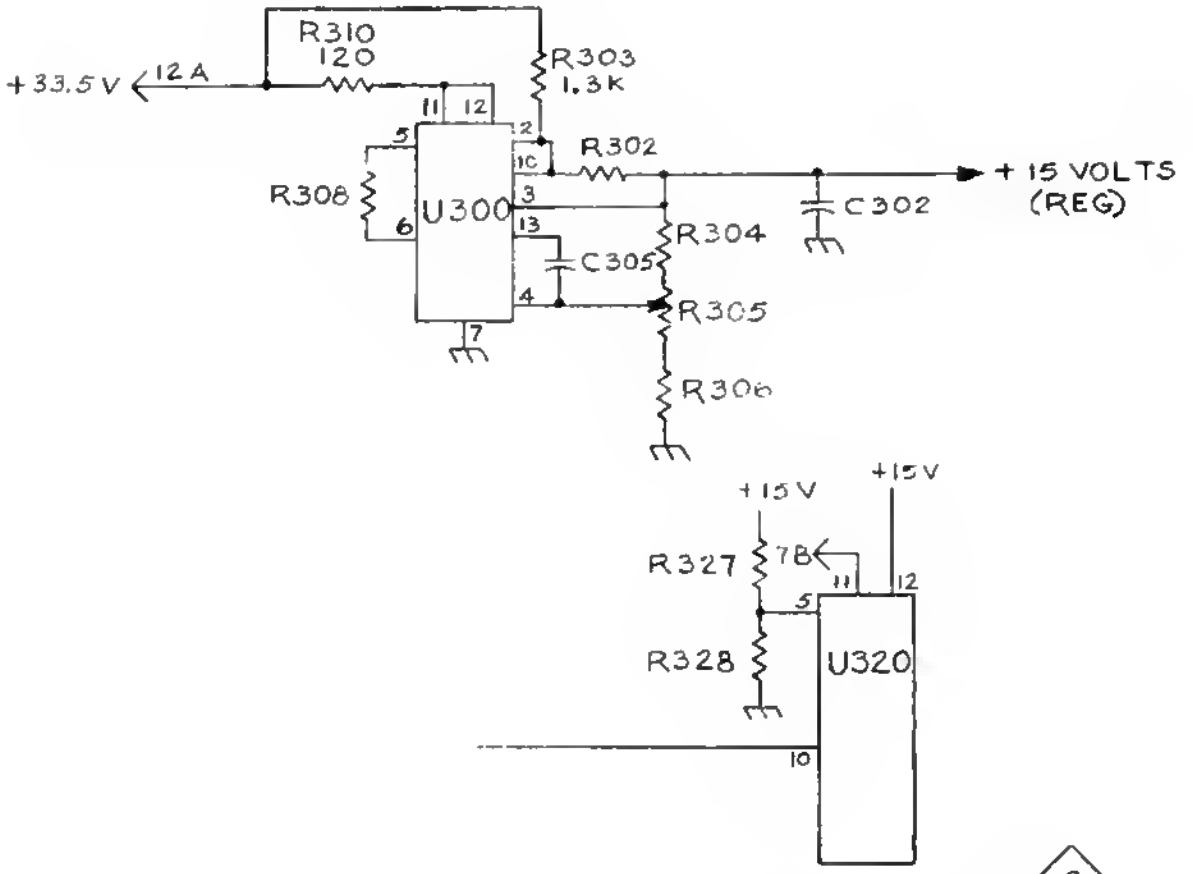

2

PARTIAL-
COUNTERS & DISPLAY

DC 501

ELECTRICAL PARTS LIST CORRECTION

ADD:

ASSEMBLY		
A1	670-3406-00	MAIN Circuit Board Assembly (950 A - Option 1)
A1	670-3407-00	MAIN Circuit Board Assembly (950 B - Option 2)
A1	670-3408-00	MAIN Circuit Board Assembly (950 D - Options 1 & 2)